ALPINE
SERVICE MANUAL

FM/MW/LW/RDS Cassette Receiver

CD Shuttle Controller

- The model described in this manual is developed from Model TDM-7531R/TDM-7532R/TDM-7535R. For information that is not mentioned in this service manual, refer to the Service Manual • TDM-7531R/TDM-7532R/TDM-7535R (Part No. 68E21961S01). + 366 2/32/515
- For the cassette deck mechanism parts (GR75S120/130) of this model, refer to the Service Manual • GR-S Series (Part No. 68E23241S01). r 24 1/29/11/5

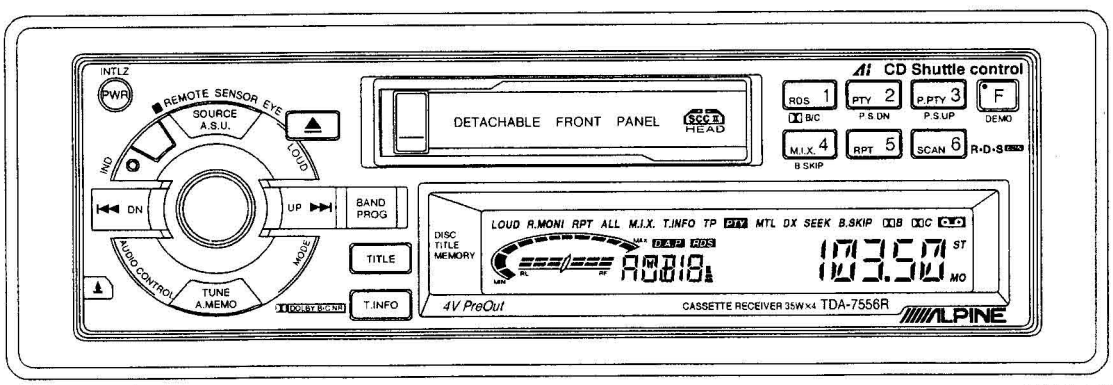

(TDA-7556R)

TDA-7556R/TDA-7659R/ TDA-7552R/TDA-7550R

Contents

Specifications 2
Packing Assembly Parts List 3
Packing Method View 3
Adjustment Procedures ..... 4 to 6
Adjustment Locations 7
Description of IC Terminal ..... 8 to 10
LCD Display 11
Block Diagram 12
Parts Layout on P.C. Boards and Wiring Diagram (1/4) ..... 13 to 14
Parts Layout on P.C. Boards and Wiring Diagram (2/4) ..... 15 to 16
Parts Layout on P.C. Boards and Wiring Diagram (3/4) ..... 17 to 18
Parts Layout on P.C. Boards and Wiring Diagram (4/4) ..... 19 to 20
Schematic Diagram (1/6) ..... 21 to 23
Schematic Diagram (2/6) ..... 24 to 26
Schematic Diagram (3/6) ..... 27 to 29
Schematic Diagram (4/6) ..... 30 to 32
Schematic Diagram (5/6) ..... 33 to 35
Schematic Diagram (6/6) ..... 36 to 38
Electrical Parts List ..... 39 to 53
Exploded View (Cabinet) ..... 55 to 56
Cabinet Assembly Parts List 57
Disassembly Instructions 58
Semiconductor Lead Identifications 59

Tuner Schematic Diagram —— Refer to the Service Manual • TDM-7531R/TDM-7532R/TDM-7535R (Part No. 68E21961S01).

Specifications

NOTE: Refer to the Service Manual • TDM-7531R/7532R/7535R (Part No. 68E21961S01) for description not mentioned in this manual.

TAPE PLAYER

S/N Ratio (Volume Display 22 Position) ..... Dolby OFF: 52dB
Dolby B • NR : 60.5dB
Dolby C • NR : 67dB (○●△)

GENERAL

Power Output (T.H.D. 10%)/Impedance ..... 16W/ch/4ohm (○△□)
Pre Output Voltage/Impedance 1V/10kohm
Dimensions (W×H×D) ..... Chassis : 178×50×152mm
Nose : 170×46×18mm
Weight 1.4kg

NOTE : Due to Continuing product improvement, specifications and designs are subject to change without notice.
○: For TDA-7556R Model Only, ●: For TDA-7659R Model Only, △: For TDA-7552R Model Only,
□: For TDA-7550R Model Only Others : Common.

Packing Assembly Parts List

Symbol No.		Part No.	Description
	101-1	02B47353F01	Nut, Hex. (M5)
	101-2	03S72235F13	Screw, Countersink (M5X8)
	101-3	46A42363F01	Stud, Bolt
	101-4	36A11113W01	Cap, Rubber (A)
	101-5	03A11112W01	Bolt, Hex. (M5) (A)
	101-6	01T75363W01	ISO / JASO Antenna Adapter
○	101-7	60S70585F01	Battery, Lit. 3V (CR2025)
●	101-7	60T55630W01	Battery, MGN R03(NB)UM-4
	102	07B64552F01	Bracket, Strap Receiver
	103	15D50406W01	Case, Inner

Symbol No.		Part No.	Description
	104	15D60773W01	Carrying, Case
○	105	01T85297W01	Assy., ISO Wire
●	105	01T85297W02	Assy., ISO Wire
△	105	01T85297W01	Assy., ISO Wire
□	105	01T85297W01	Assy., ISO Wire
○	106	01T75235W05	Assy., Card Remocon
●	106	01T75436W01	Unit, Remocon
	107	68P80683W20	Owner's Manual

NOTE : ○ : For TDA-7556R Model Only, ● : For TDA-7659R Model Only, △ : For TDA-7552R Model Only,
□ : For TDA-7550R Model Only, Others : Common.

Packing Method View

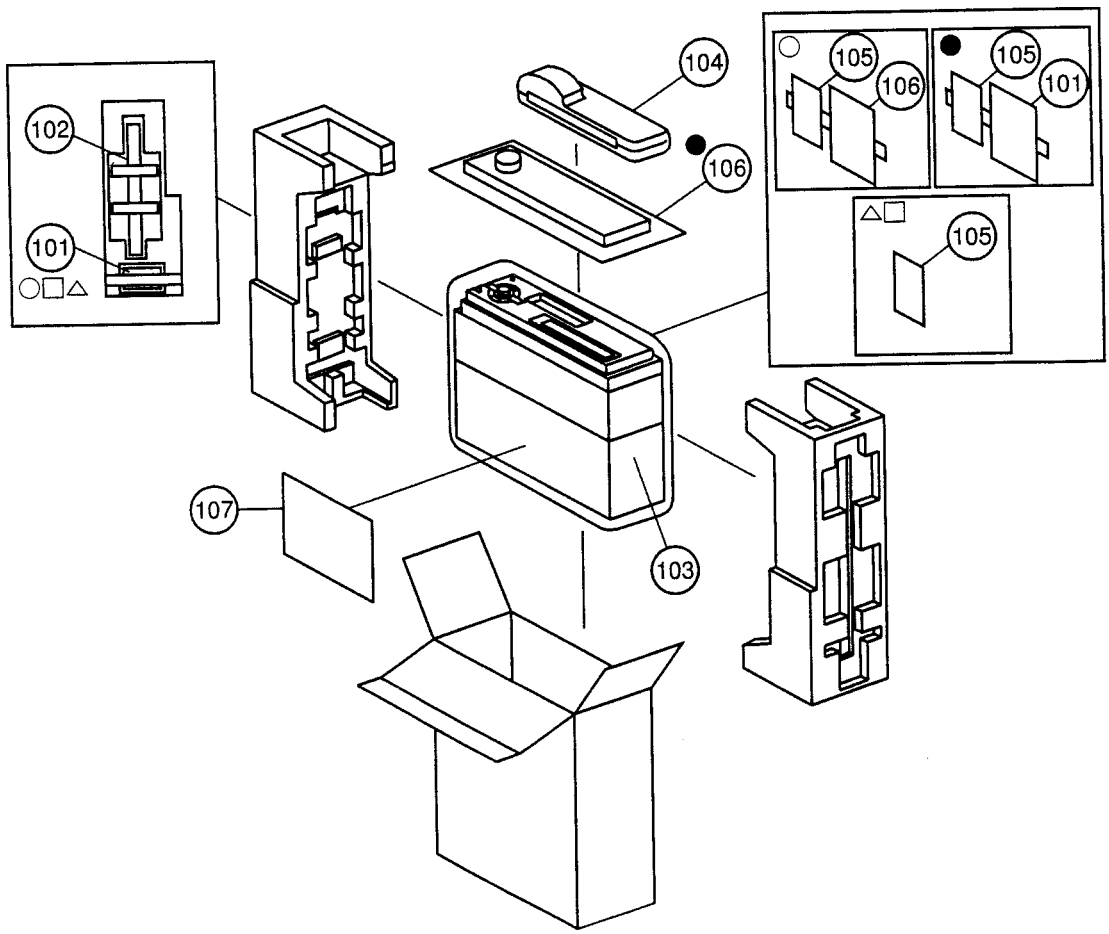

NOTE : ○ : For TDA-7556R Model Only, ● : For TDA-7659R Model Only, △ : For TDA-7552R Model Only,
□ : For TDA-7550R Model Only, Others : Common.

Adjustment Procedures

1. FM SECTION

(1) Dummy Antenna Circuit

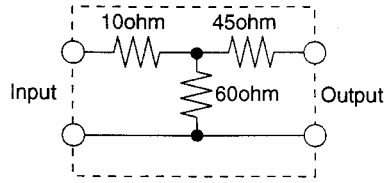

For 50 ohm FM Signal Generator

Figure 1

(2) Connections

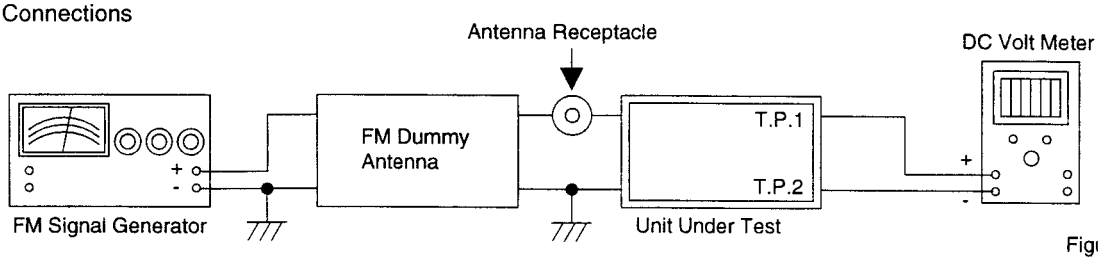

Figure 2

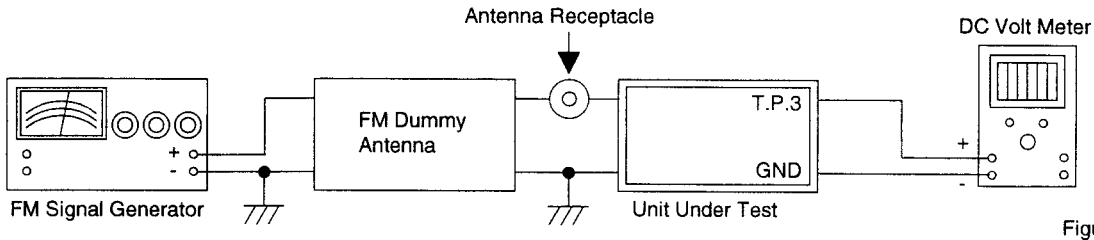

Figure 3

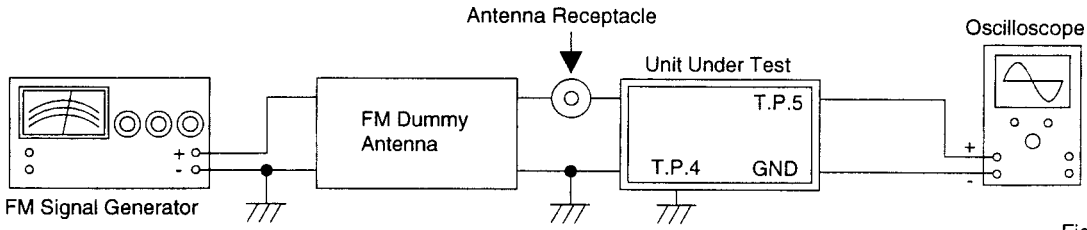

Figure 4

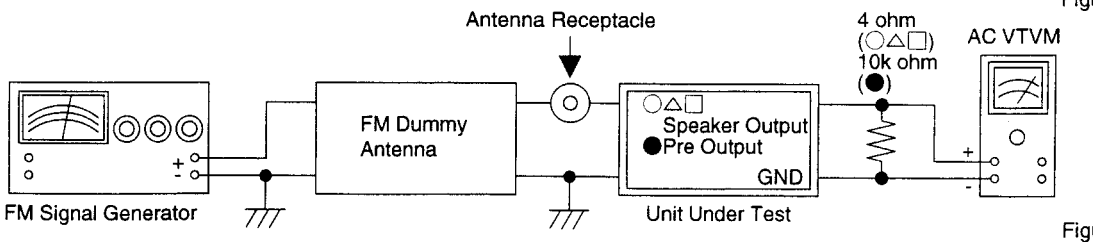

Figure 5

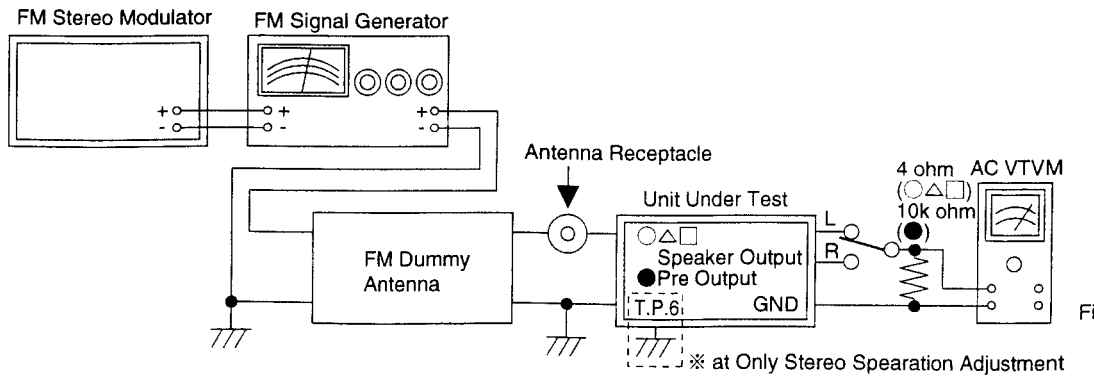

Figure 6

(3) Control Settings

Power Switch ..... ON
Fader Control ..... Center Position
Balance Control ..... Center Position
Treble/Bass Control ..... Center Position
Band Switch ..... FM
Others ..... OFF

(4) Adjustment Procedures

Step	Description		Connection	Signal Generator	Dial Control	Test Point	Adjustment
1	IF Adjustment		Figure 2	98.1MHz, 72dB (Mod. OFF)	98.1MHz	T.P.1 T.P.2	Adjust L2101 to 0±15mV.
2	Signal Meter Adjustment		Figure 3	98.1MHz, 46dB (Mod. 400Hz, Dev. 40kHz)	98.1MHz	T.P.3	Adjust VR2101 to 3.5±0.1V.
3	Seek Stop Adjustment		Figure 4	98.1MHz, 30dB (Mod. OFF)	98.1MHz	T.P.4 T.P.5	Adjust VR2104 for the waveform changing to maximum output. Figure : Waveform of T.P.5 output. 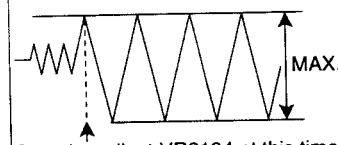 Stop the adjust VR2104 at this time.
4	Noise Level Adjustment	(1)	Figure 5	98.1MHz, 72dB (Mod. 400Hz, Dev. 40kHz)	98.1MHz	○△□ Speaker Output	Adjust VOLUME to obtain 2V output. This value is 0dB.
						●Pre Output	Adjust VOLUME to obtain 400mV output. This value is 0dB.
		(2)	Figure 5	98.1MHz, -19dB (Mod. 400Hz, Dev. 40kHz)	98.1MHz	○△□ Speaker Output	Adjust VR2105 to -25±3dB output at SG level minimum.
						●Pre Output	
5	Stereo Blend Adjustment (Lch)		Figure 6	98.1MHz, 40dB (Mod. 1kHz, Dev. 36kHz, Stereo, Lch Only)	98.1MHz	○△□ Speaker Output	Adjust VR2102 for Lch and Rch output level difference to be 8±2dB.
						●Pre Output	
6	Stereo Separation Adjustment (Lch)		Figure 6	98.1MHz, 72dB (Mod. 1kHz, Dev. 36kHz, Stereo, Lch Only)	98.1MHz	○△□ Speaker Output T.P.6	Adjust VR2103 for Rch output to be minimum, and confirm Lch and Rch output level difference is more than 20dB.
						● Pre Output	
7	Stereo Blend Adjustment (Rch)		Figure 6	98.1MHz, 40dB (Mod. 1kHz, Dev. 36kHz, Stereo, Rch Only)	98.1MHz	○△□ Speaker Output	Proceed same adjustment under step 5.
						●Pre Output	
8	Stereo Separation Adjustment (Rch)		Figure 6	98.1MHz, 72dB (Mod. 1kHz, Dev. 36kHz, Stereo, Rch Only)	98.1MHz	○△□ Speaker Output T.P.6	Proceed same adjustment under step 6 by alternating Lch and Rch.
						● Pre Output	

NOTE: ○: For TDA-7556R Model Only, ●: For TDA-7659R Model Only, △: For TDA-7552R Model Only, □: For TDA-7550R Model Only, Others : Common.

2. TAPE PLAYER SECTION

(1) Connection

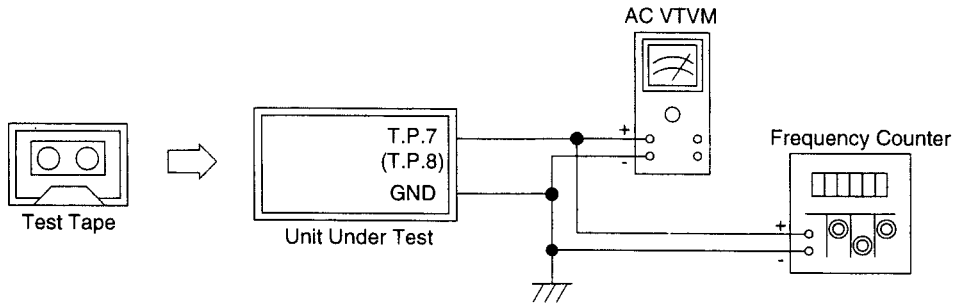

Figure 7

(2) Control Settings

Power Switch ..... ON
Fader Control ..... Center Position
Balance Control ..... Center Position
Treble/Bass Control ..... Center Position
Others ..... OFF

(3) The necessaries for adjustment
GR-S Extension Cord
Assy., EX Cord Kit for GR-S Mechanism
Part No. 01E23255S01
See Adjustment Locations (Figure 10).

(4) Adjustment Procedures

Step	Description	Test Tape	Connection	Test Point	Adjustment Point	Adjustment
1	Head Azimuth Adjustment	MTT-114NB (14kHz)	Figure 7	T.P.7 (Lch) T.P.8 (Rch)	Head Azimuth Adjustment Screws (Figure 8)	Adjust for Max. and same level output at Forward and Reverse positions.
2	Dolby Level Adjustment	MTT-150 (400Hz)	Figure 7	T.P.7 (Lch) T.P.8 (Rch)	VR201 (Lch) VR202 (Rch)	Adjust for 388mV ±1dB at T.P.7 (Lch) and T.P.8 (Rch).
3	Tape Speed Adjustment	MTT-111N (3kHz)	Figure 7	T.P.7 (Lch) or T.P.8 (Rch)	Tape Speed Adjustment (Figure 9)	Adjust for 2,970 to 3,090Hz at T.P.7 (T.P.8).

Adjustment Locations

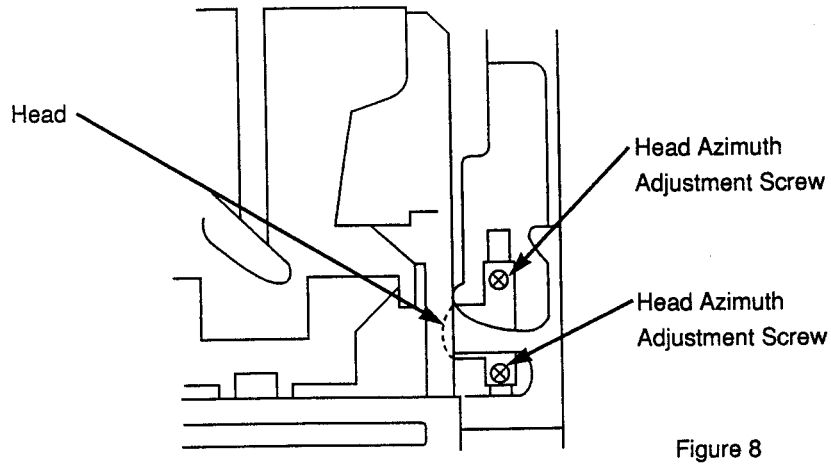

Figure 8

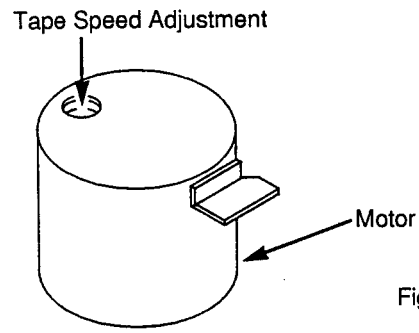

Figure 9

Cassette Deck Mechanism

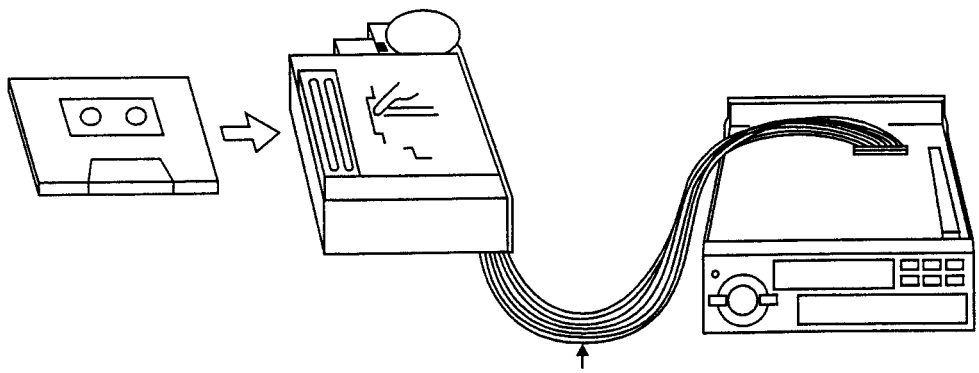

Figure 10

Extension Cord (Part No. 01E23255S01)

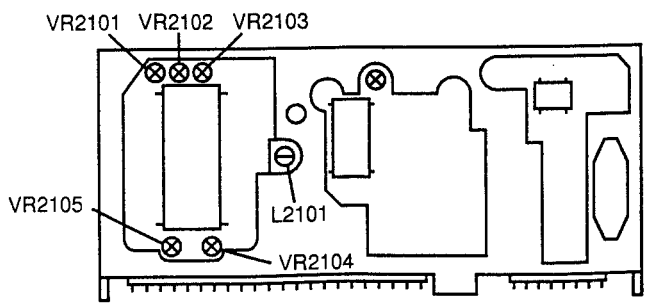

FM/MW/LW Tuner Unit (FE001)

NOTE: For the Adjustment parts (VR201, VR202) and Test Points (T.P.1 ~6), refer to the Parts Layout on P.C. Boards and Wiring Diagram.

Description of IC Terminal

85151W08 : IC501

No.	Symbol		I/O	Terminal Description
1	○●	NFP EV DATA	O	E.VOL DATA output terminal for ADJ-NFP.
	△□	NC	—	No connection terminal.
2	NOSE PWR		O	Power Control signal output terminal to NOSE.
3	○●△	BUZZER	O	Guide Tone signal output terminal.
	□	NC	—	No connection terminal.
4	DTS START		O	Data START signal output terminal to DTS μ-COM.
5	$\overline{\text{DTS MUTE}}$		I	Mute signal input terminal from DTS μ-COM.
6	DTS CE		O	CE signal output terminal to DTS μ-COM.
7	ALARM		O	ALARM signal output terminal.
8	○●	NFP EV CE	O	E.VOL CE output terminal for ADJ-NFP.
	△□	NC	—	No connection terminal.
9	GND		—	GND terminal.
10	$\overline{\text{DOLBY B}}$		O	Dolby B • NR ON/OFF signal output terminal. H: OFF / L: ON
11	○●△	$\overline{\text{DOLBY C}}$	O	Dolby C • NR ON/OFF signal output terminal. H: OFF / L: ON
	□	NC	—	No connection terminal.
12	L.O. FAST		O	Gain Control signal output terminal for MS IC at CUE/REV. H: CUE/REV, L: PLAY
13	FOR/$\overline{\text{REV}}$		O	Tape Direction indicator output terminal. H: FOR / L: REV
14	O.MOTOR		O	Motor Rotation Control output terminal. H: ROTATE / L: STOP
15	R-IN		O	Sub Motor Rotation Control output terminal.
16	F-IN		O	R-IN: H (CCW)/L (CW)/H (BRAKE)/L (OFF), F-IN: L (CCW)/H (CW)/L (BRAKE)/H (OFF)
17	MTR FAST		I	Main Motor Rotation Control input terminal. H: High Speed / L: Stabilization
18	M.S. DET		I	Music Sensor Detection signal input terminal.
19	METAL		I	Metal Tape Detection terminal. H: METAL / L: NORMAL
20	PACK IN		I	Pack In Detection terminal. H: PACK IN / L: PACK OUT
21	REV.DET		I	REV REEL Rotation Detection input terminal.
22	MODE SW		I	Mode Detection input terminal.
23	FOR DET		I	FOR REEL Rotation Detection input terminal.
24	GND		—	GND terminal.
25	PAUSE SW		I	Pause Mode Detection input terminal.
26	MUTE		O	Audio Mute signal output terminal.
27	NFP-1		O	NFP Control signal output terminal. H: FAD-F / L: OTHERS
28	NFP-2		O	NFP Control signal output terminal. H: FAD-R / L: OTHERS
29	EV-DATA		I/O	Serial Data output to E.VOL/ACK input from E.VOL terminal.
30	EV-CLK		O	Serial Clock output terminal to E.VOL.
31	PWR IC		O	Stand-by Control output terminal for Power IC.
32	PWR ON		O	Power Control signal output terminal.
33	NC		—	No connection terminal.
34	BUS OUT		O	Signal output terminal to BUS I/F.
35	$\overline{\text{RESET}}$		I	System Reset input terminal.
36	REMOCON		I	Remocon Data input terminal.
37	BUS IN		I	Signal input terminal from BUS I/F.
38	ACC DET		I	ACC Detection signal input terminal.
39	BAT DET		I	BATT Detection signal input terminal.
40	VDD		—	Power Supply terminal.

NOTE: ○: For TDA-7556R Model Only, ●: For TDA-7659R Model Only, △: For TDA-7552R Model Only, □: For TDA-7550R Model Only, Others : Common.

No.	Symbol		I/O	Terminal Description
41	X2		O	System Clock OSC connection terminal. (8.38MHz)
42	X1		I	
43	GND		—	GND terminal.
44	NC		—	No connection terminal.
45	GND		—	GND terminal.
46				
47	Ai-NET $\overline{\text{IN}}$/OUT		I	Audio signal switching input terminal. H: Outer AMP / L: Inner AMP
48	○●	$\overline{\text{IN INT}}$	I	Mutual Reset IN-INT signal input terminal.
	△□	PULL-DOWN	—	Pull-Down terminal.
49	MODEL		I	A/D input terminal for Model Set Up.
50	ENCODER 1		I	Encoder Data input terminal.
51	ENCODER 2		I	
52	GND		—	GND terminal.
53				
54	NOSE-DET		I	Nose Detection input terminal.
55	V_{DD}		—	Power Supply terminal.
56				
57	LCD DO		I	Serial Data input terminal from LCD Driver.
58	LCD DI		O	Serial Data output terminal to LCD Driver.
59	LCD CLK		O	Serial Clock output terminal to LCD Driver.
60	LCD CE		O	Serial Data CE signal output terminal to LCD Driver.
61	LCD RST		O	Reset signal output terminal to LCD Driver.
62	DTS STS		I	Serial Data input terminal from DTS μ-COM.
63	DTS CMD		O	Serial Data output terminal to DTS μ-COM.
64	$\overline{\text{DTS CLK}}$		O	Serial Clock output terminal to DTS μ-COM.

NOTE: ○: For TDA-7556R Model Only, ●: For TDA-7659R Model Only, △: For TDA-7552R Model Only, □: For TDA-7550R Model Only, Others : Common.

85088W01 : IC502

No.	Symbol	I/O	Terminal Description
1	LW	O	LW band selection output terminal.
2	LO/$\overline{\text{DX}}$	O	Local/DX control output terminal. H: During SEEK LOCAL
3	NC	—	No Connection terminal.
4	AV_{SS}	—	GND terminal for A/D converter.
5	$\overline{\text{LPF SW}}$	O	LPF time constant switching terminal at AF CHECK.
6	IF MUTE	O	IF Mute output terminal.
7	AV_{REF1}	—	Reference voltage terminal for A/D Converter.
8	RXD	I	RDS Monitor input terminal (Pull-Up terminal).
9	TXD	O	RDS Monitor output terminal (No Connection terminal).
10	SYNC	O	SYNC signal output terminal (No Connection terminal).
11	PLL CLK	O	Clock output terminal to PLL.
12	PLL DATA	O	Data output terminal to PLL.
13	PLL CE	O	Data communication control signal output terminal to PLL.
14	DTS MUTE	O	Audio mute output terminal.
15	DTS START	I	DTS data start input terminal.
16	DTS CMD	I	Command input terminal from Main μ-COM.
17	DTS STS	O	Status output terminal to Main μ-COM.
18	DTS CLK	I	Communication clock signal input terminal from Main μ-COM.

No.	Symbol	I/O	Terminal Description
19 ∫ 32	NC	—	No Connection terminal.
33	GND	—	GND terminal.
34 ∫ 57	NC	—	No Connection terminal.
58	FM/$\overline{AM}$	O	FM/AM mode switching signal output terminal. H: FM
59	AUDIO IN	I	Audio xerox Detection terminal.
60	RESET	I	System reset input terminal.
61	RDS CLK	I	RDS clock input terminal from RDS Decoder.
62	RDS DATA	I	RDS data input terminal from RDS Decoder.
63	DTS CE	I	DTS CE input terminal.
64 ∫ 66	NC	—	No Connection terminal.
67	50K REF	O	L.P.F. switching output terminal at RDS mode.
68	VDD	—	Power supply terminal.
69	X2	—	System clock OSC connection terminal. (4.9152 MHz)
70	X1	—	
71	GND	—	GND terminal.
72	NC	—	No Connection terminal.
73	PLL DATA I	I	PLL Data input terminal.
74	AVDD	—	Analog power supply terminal for A/D converter.
75	AVREF0	—	Reference voltage terminal for A/D converter.
76	S.METER	I	Signal meter voltage input terminal.
77	A/I	I	Port detects adjoining rejection interference of station.
78	M.P	I	Port detects multi path interference of station.
79	ST	I	ST signal input terminal.
80	SD	I	Station detector signal input terminal.

LCD Display

SEGMENT

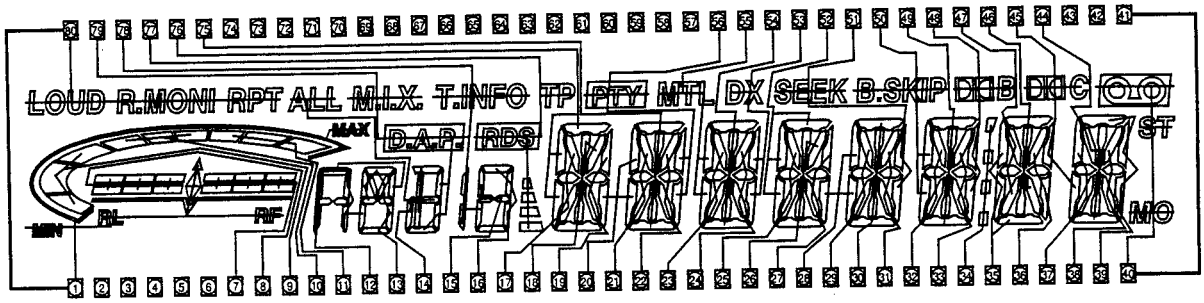

COMMON

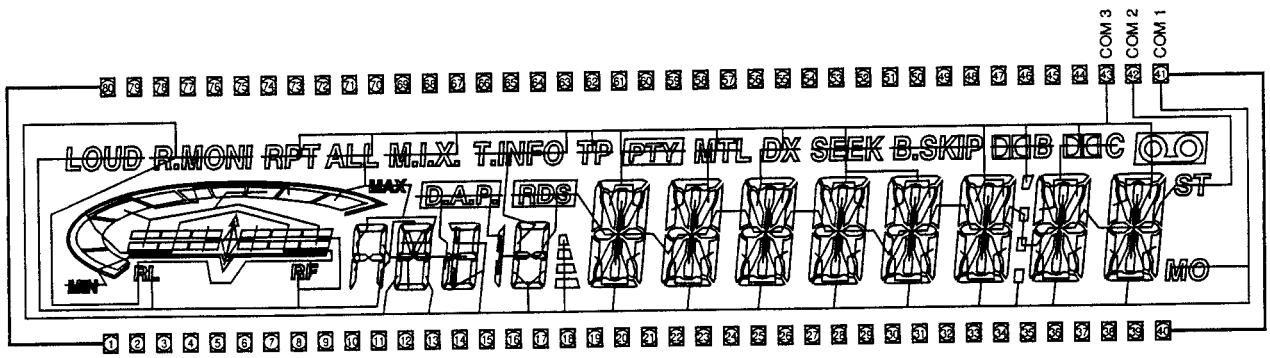

Block Diagram

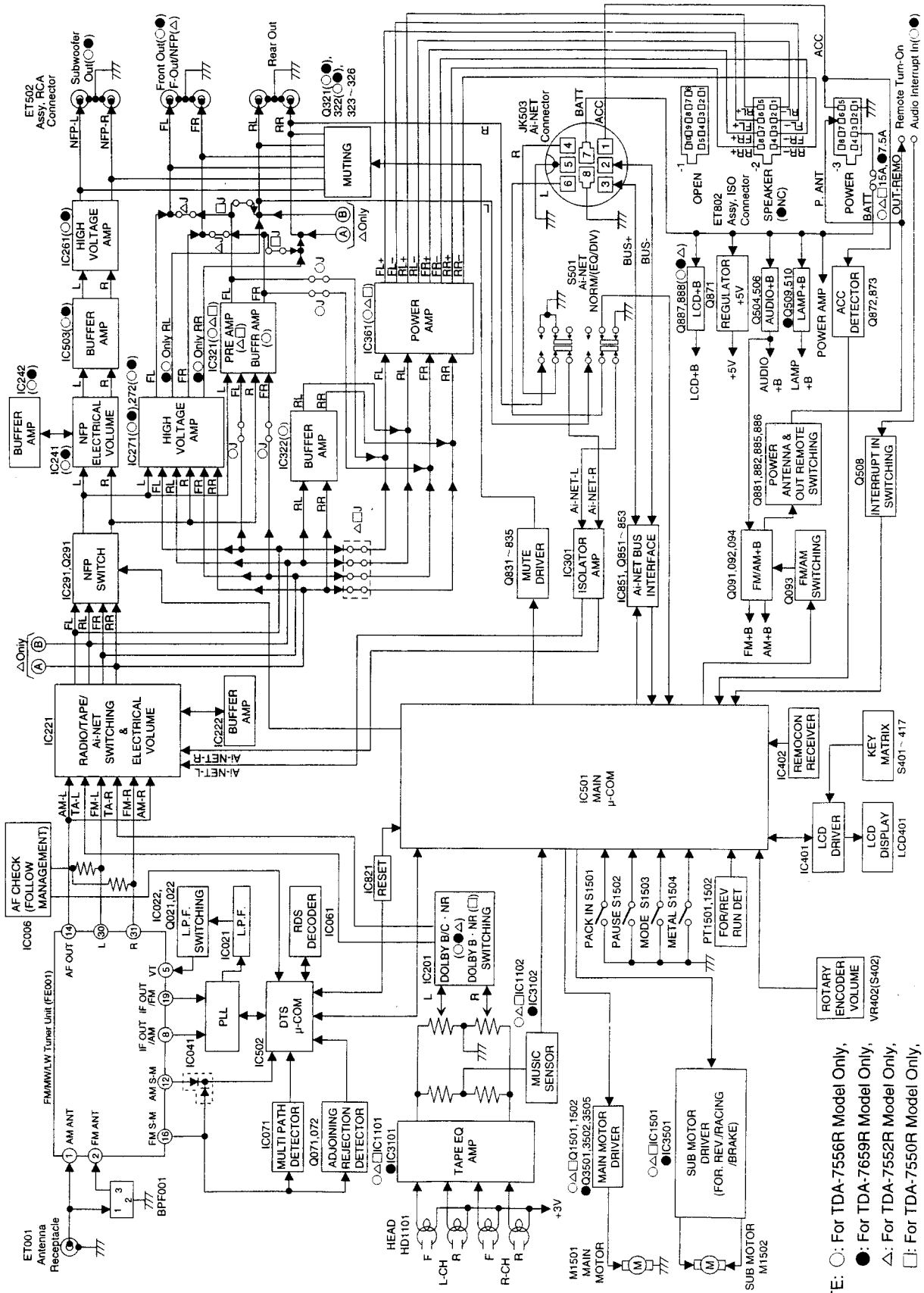

NOTE: ○: For TDA-7556R Model Only,
●: For TDA-7659R Model Only,
△: For TDA-7552R Model Only,
□: For TDA-7550R Model Only,
Others : Common.

Parts Layout on P.C. Boards and Wiring Diagram (1/4)

Main P.C.Board (Component Side View)

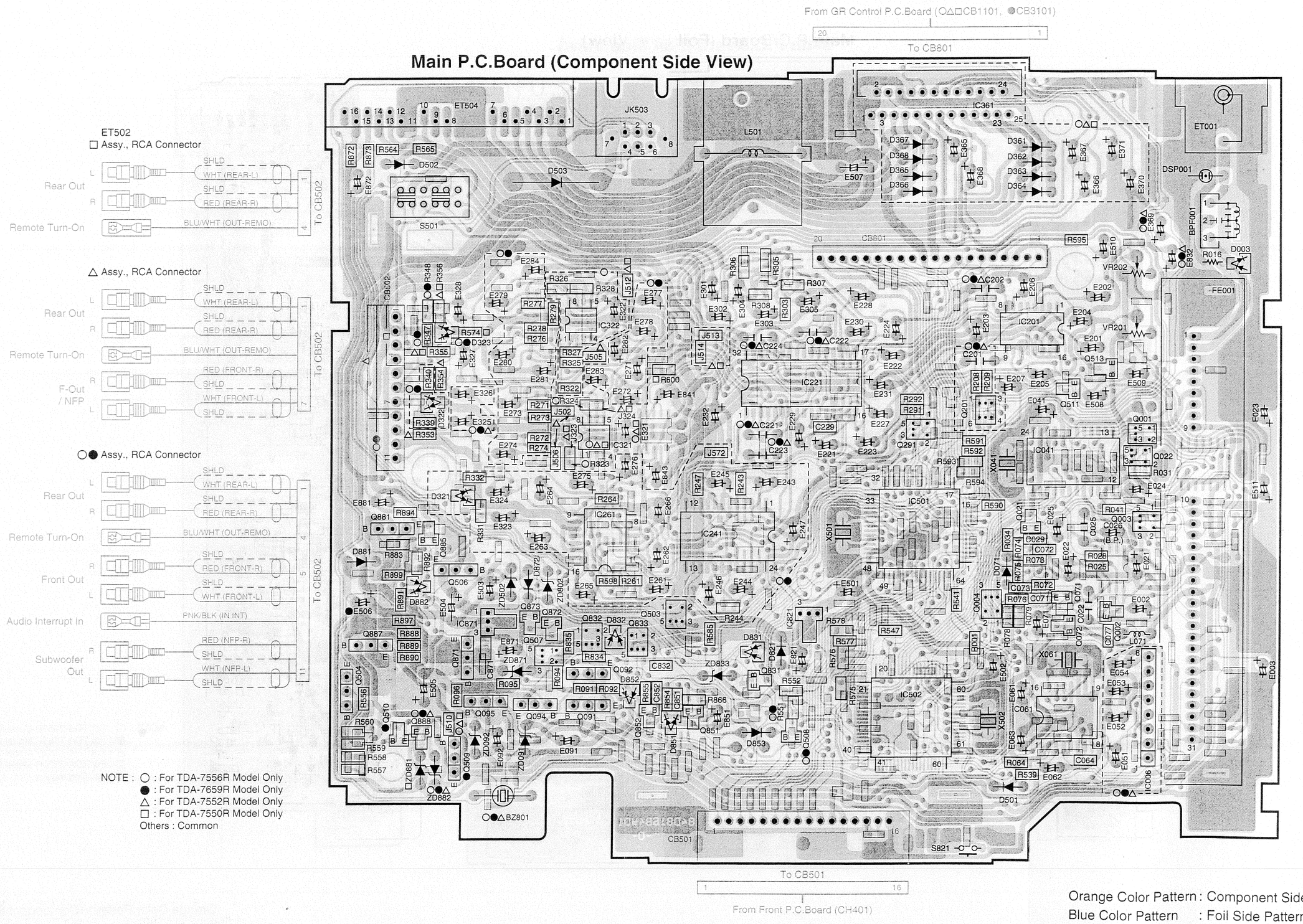

Orange Color Pattern : Component Side Pattern
Blue Color Pattern : Foil Side Pattern

Parts Layout on P.C. Boards and Wiring Diagram (2/4)

1

2

3

4

5

Main P.C.Board (Foil Side View)

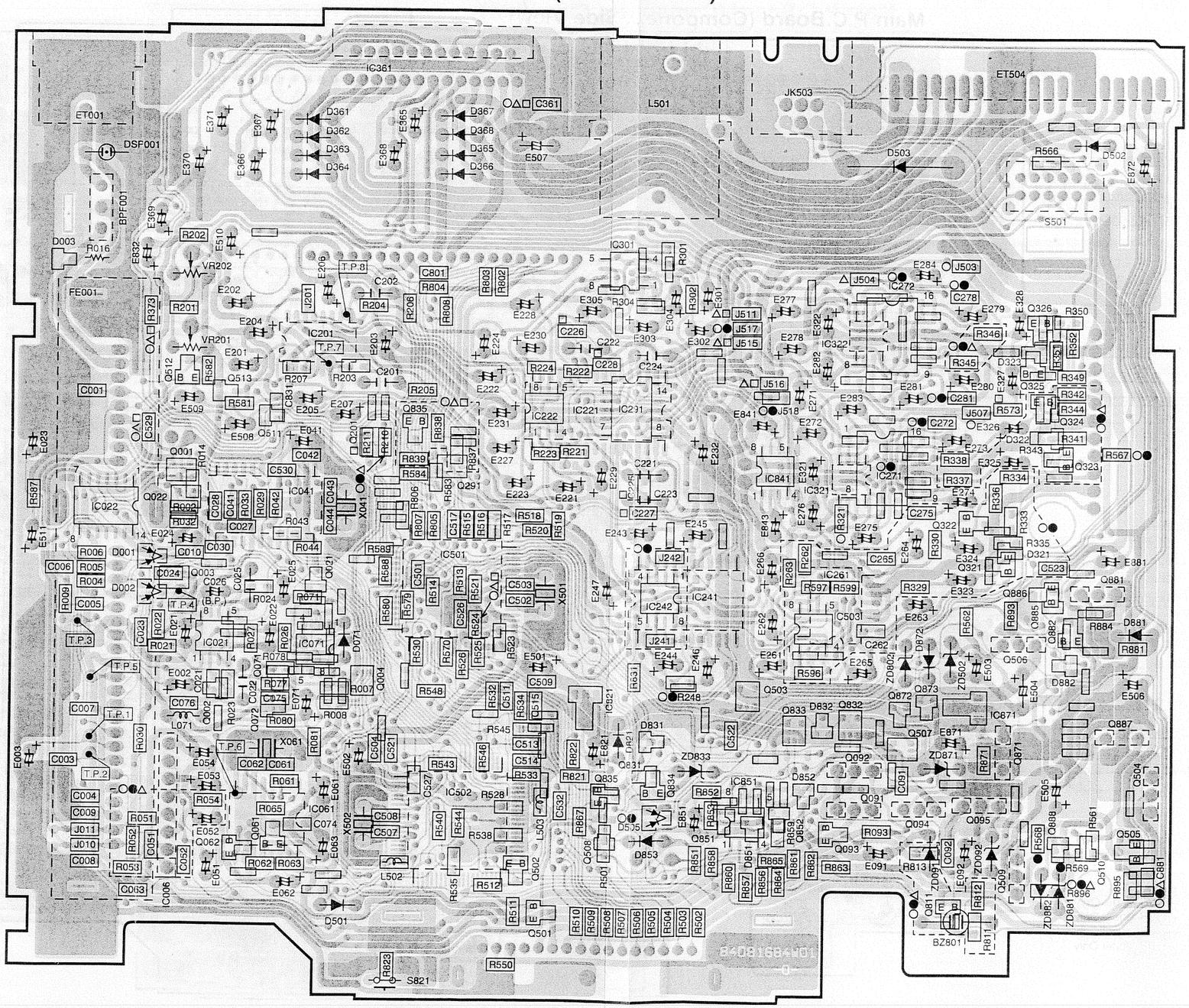

NOTE : ○ : For TDA-7556R Model Only
● : For TDA-7659R Model Only
△ : For TDA-7552R Model Only
□ : For TDA-7550R Model Only
Others : Common

Orange Color Pattern : Component Side Pattern
Blue Color Pattern : Foil Side Pattern

A B C D E F G

Parts Layout on P.C. Boards and Wiring Diagram (3/4)

All P.C. Boards viewed from soldered side.

○△□(TDA-7556R/TDA-7552R/TDA-7550R Model Only)

GR Control P.C.Board

M1501
Assy., Main Motor

To CB1101

To Main P.C. Board (CB801)

Photo P.C.Board

Head P.C.Board (HD1101)

Sub Motor P.C.Board

Front P.C.Board

To CH401

To Main P.C. Board (CB501)

NOTE : ○ : For TDA-7556R Model Only
● : For TDA-7659R Model Only
△ : For TDA-7552R Model Only
□ : For TDA-7550R Model Only
Others : Common

Orange Color Pattern : Component Side Pattern
Blue Color Pattern : Foil Side Pattern

TDA-7556R/7659R/
TDA-7552R/7550R

Parts Layout on P.C. Boards and Wiring Diagram (4/4)

All P.C. Boards viewed from soldered side.

● (TDA-7659R Model Only)

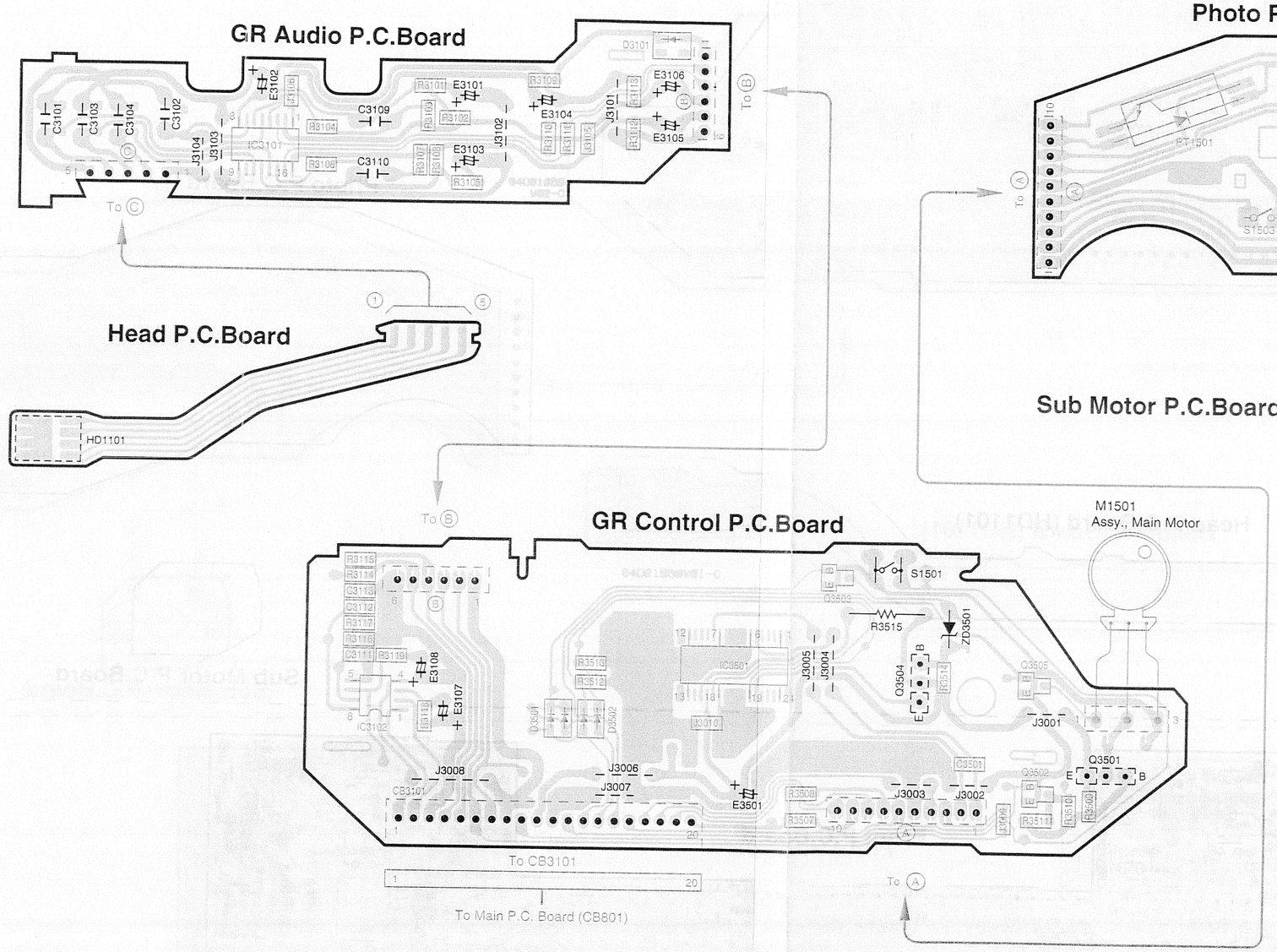

Blue Color Pattern : Foil Side Pattern

Schematic Diagram (1/6)

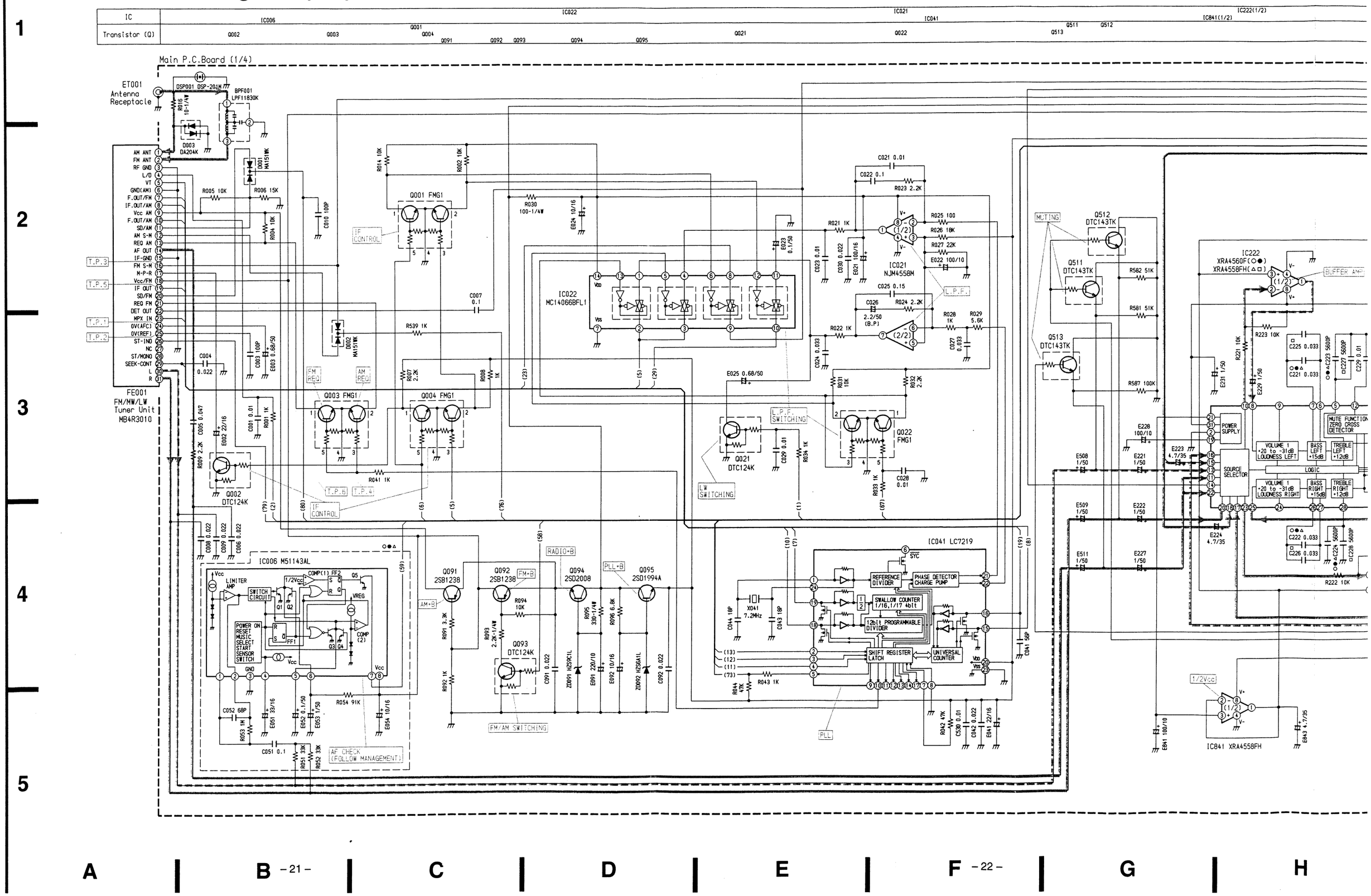

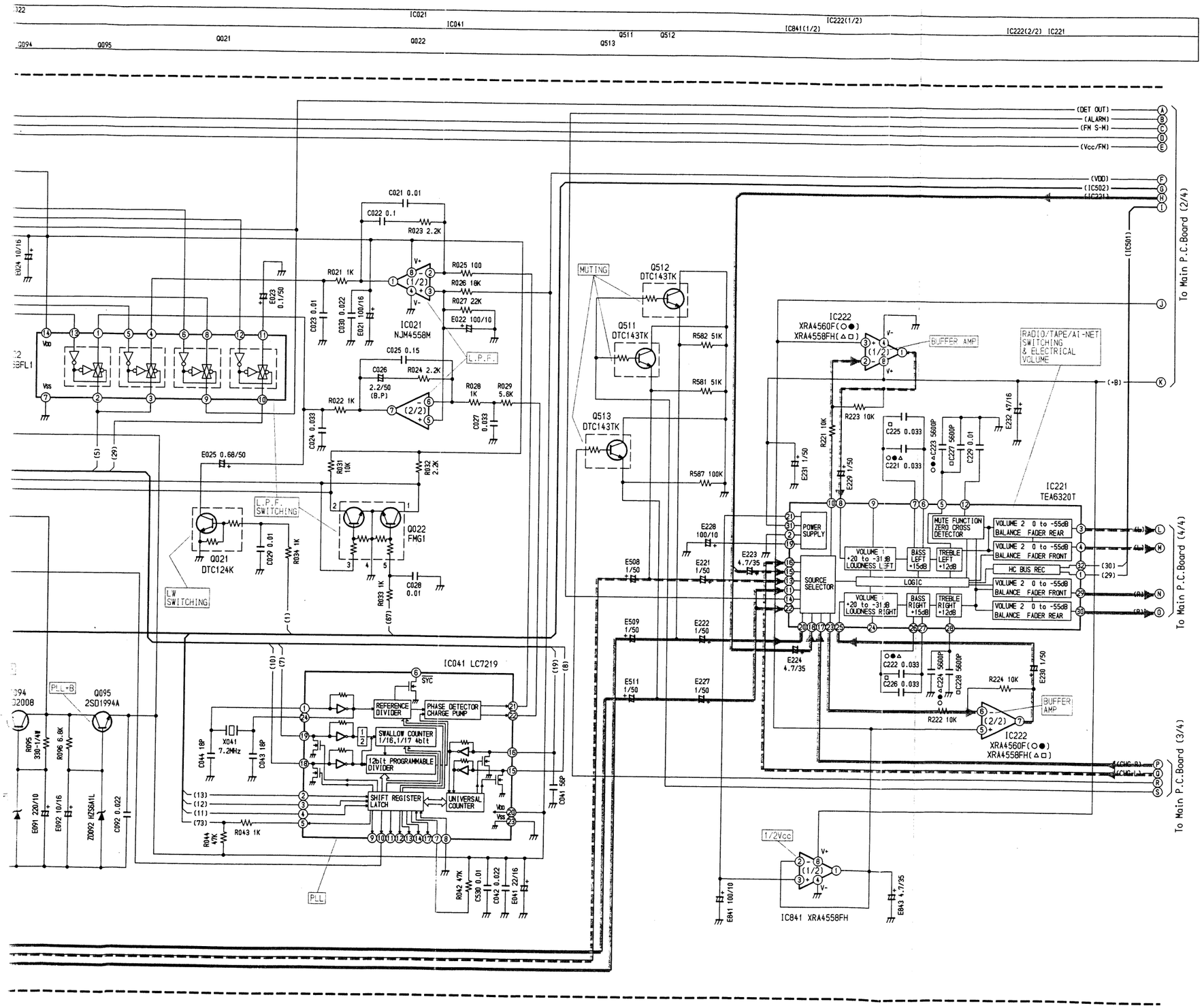

○●△IC006

1	1.4V	FM
2	1.4V	FM
3	0V	
4	1.3V	FM
5	0V	FM
6	0V/8.9V	MOD. ON/OFF
7	0V/5V	MOD. ON/OFF
8	9V	

IC021

1	4.2V	FM
2	4.2V	FM
3	4.2V	FM
4	0V	
5	2.7V	FM
6	2.7V	FM
7	2.2V/4.2V	RDSON/OFF
8	9.2V	

IC022

1	2.2V/4.2V	RDSON/OFF
2	4.2V	
3	4.2V	
4	2.2V/5.1V	RDSON/OFF
5	9.2V/0V	RDSON/OFF
6	9.2V	FM
7	0V	
8	2.4V	FM
9	2.4V	FM
10	0V/2.3V	SEEK ON/OFF
11	0V	FM
12	9.2V	FM
13	0V/8.6V	FM/AM
14	9.2V	

IC222

1~3	4.2V	FM
4	0V	
5~7	4.2V	FM
8	8.5V	

IC841

1~3	4.3V	
4	0V	
5~7	4.3V	TAPE
8	8.5V	

IC041

1	OSC		16	0V	FM
2~5	4.9V	SEEK ON	17	NC	
6	NC		18	2.5V	AM
7	4.8V	FM	19	2.6V	FM
8	0V		20	4.9V	
9	NC		21, 22	2.7V	FM
10	4.8V	FM	23	0V	
11~14	NC		24	OSC	
15	2.8V	AM			

Q004

1	0V/4V	IF MUTE ON/OFF
2	3V/0V	SEEK ON/OFF
3	0V/5V	SEEK ON/OFF
4	0V/0V	
5	4.5V/0V	IF MUTE ON/OFF

IC221

1	4.9V		17	Audio	CD Changer
2	0V		18	Audio	TAPE
3, 4	Audio		19, 20	Audio	FM
5~8	4.2V	FM	21	4.2V	FM
9	NC		22	Audio	AM
10	4.2V	FM	23	4.2V	FM
11	Audio	AM	24	NC	
12	—		25~28	4.2V	FM
13	Audio	FM	29, 30	Audio	
14	Audio	TP-ALM	31	8.5V	
15	Audio	TAPE	32	4.9V	
16	Audio	CD Changer			

	E	C	B	MODE
Q002	0V/0V	0V/0V	0V/4V	IF MUTE ON/OFF
Q021	0V/0V	0V/0V	4.7V/0V	LW ON/OFF
Q091	9.1V/9.1V	0V/9V	9V/8.5V	FM/AM
Q092	9V/9.1V	9V/0.7V	8.4V/9.1V	FM/AM
Q093	0V/0V	0V/9V	4.8V/0V	FM/AM
Q094	9.1V	13.6V	9.6V	TUNER
Q095	4.9V	13.6V	5.5V	TUNER
Q511	0V/0V	0V/0V	5V/0V	IF MUTE ON/OFF
Q512	0V/0V	0V/0V	5V/0V	IF MUTE ON/OFF
Q513	0V/0V	0V/0V	5V/0V	IF MUTE ON/OFF

	1	2	3	4	5	MODE
Q001	0V/9V	0V/9V	3V/0V	0V/0V	3V/0V	SEEK ON/OFF
Q003	8V/0V	1V/0V	0V/4.5V	0V/0V	0V/4.5V	REQ ON/OFF
Q022	0V/9V	9V/0V	0V/9V	0V/0V	4.9V/0V	RDS ON/OFF

<Measuring Conditions>

1. Power Supply Voltage : DC14V
2. Measuring Meter : Digital Multi Meter
3. Measuring Point Reference : Between Ground
4. Measuring Conditions : No Signal Input
   FM : 98.1MHz
   AM : 999kHz (MW)
   TAPE: Blank Tape Play

NOTE: ○ : For TDA-7556R Model Only,
● : For TDA-7659R Model Only,
△ : For TDA-7552R Model Only,
□ : For TDA-7550R Model Only,
Others : Common.

NOTE:

1. All resistance values are in ohms. K = 1,000
2. All capacitance values are in microfarads. $P = \frac{1}{1,000,000}$

TDA-7556R/7659R/
TDA-7552R/7550R

TDA-7556R/7659R/
TDA-7552R/7550R

Schematic Diagram (2/6)

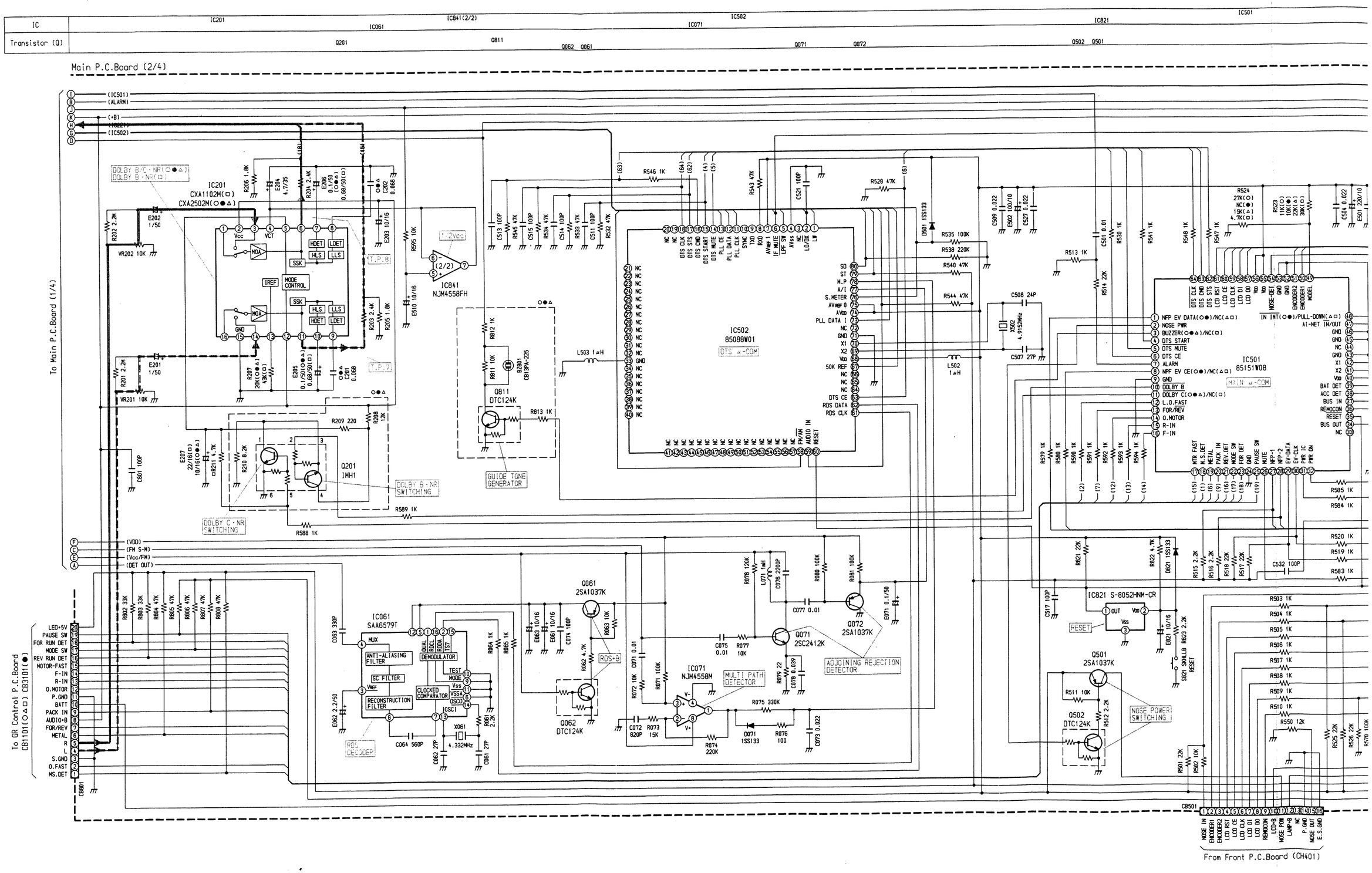

TDA-7556R/7659R/
TDA-7552R/7550R

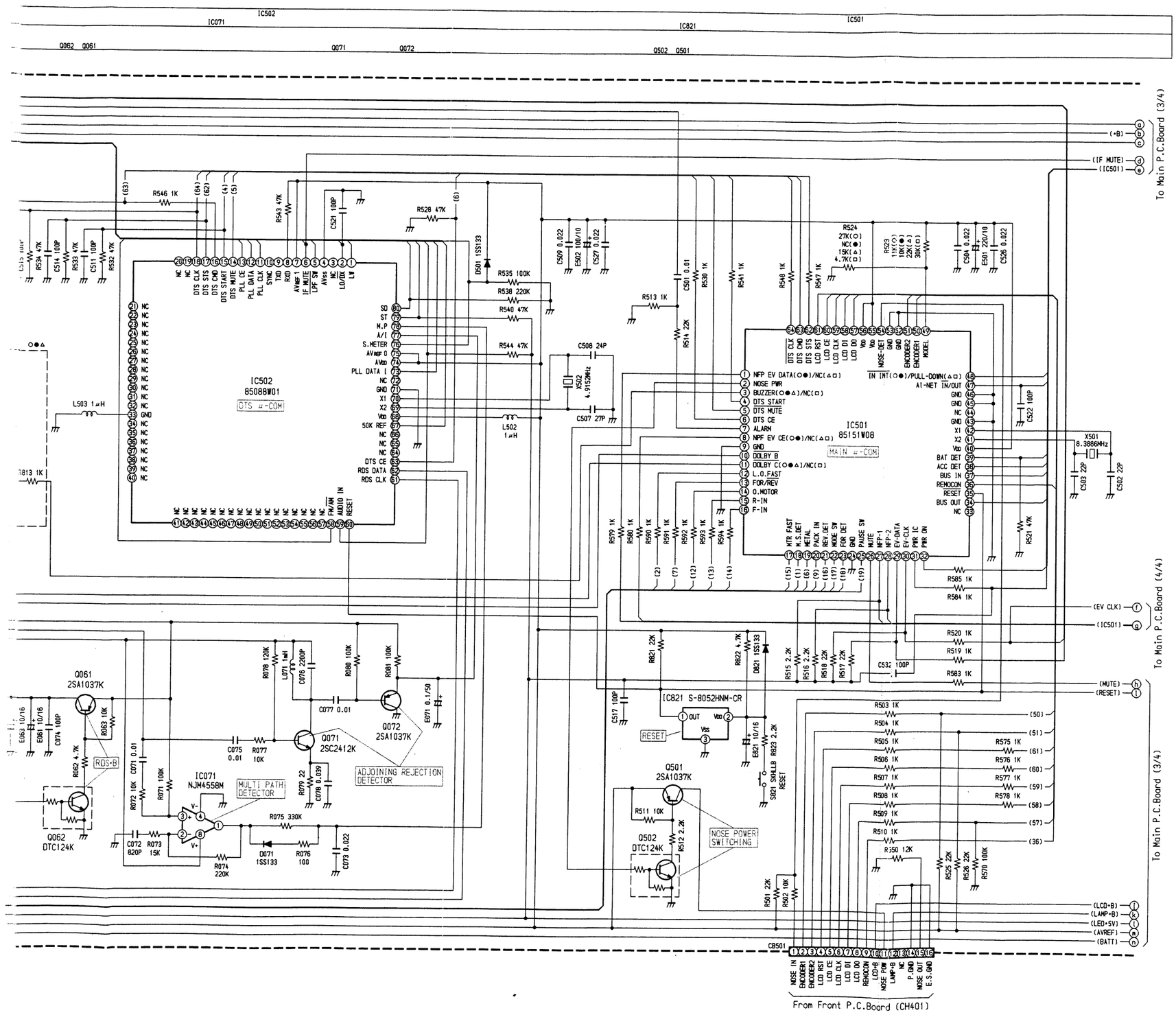

IC061

1	NC	
2	5V	FM
3, 4	2.4V	FM
5	4.8V	
6	0V	
7, 8	2.4V	FM
9–11	0V	
12	4.9V	
13, 14	OSC	
15	NC	
16	4.8V	FM

IC071

1–3	4.8V	FM
4	0V	
5–7	NC	
8	9V	

IC821

1	5V/1.7V	RESET ON/OFF
2	5V/0V	RESET ON/OFF
3	0V	

IC841

1–3	4.3V	
4	0V	
5–7	4.3V	TAPE
8	8.5V	

IC502

1	5V	LW	60	0V/5V	RESET ON/OFF
2	5V/0V	LO/DX	61–63	DATA	
3	0V	FM	64–66	NC	
4	0V		67	5V/0V	RDS ON/OFF
5	5V	FM	68	5V	
6	0V	FM	69, 70	OSC	
7–9	5V	FM	71	0V	
10	0V	FM	72	NC	
11–18	DATA		73	DATA	
19–32	NC		74, 75	5V	
33	0V		76	0V	FM
34–57	NC		77, 78	5V	FM
58	5V/0V	FM/AM	79	0V/5V	ST/MONO
59	5V		80	0V	FM

IC201

1	NC	
2	8.5V	
3	4.2V	
4	4.2V	AVREF
○●△5	0V/3.5V/7.6V	NORMAL/DOLBY B/C
□5	0V/3.5V	NORMAL/DOLBY B
6	4.2V	
7	0V	
○●△8	0V	
□8	NC	
○●△9	0V	
□9	NC	
10	0V	
11	4.2V	
12	8.5V	
13	1.2V	
14	4.2V	
15	0V	
16	NC	

IC501

○●1	5V		27–30	5V	
△□1	NC		31	5V/0V	PWR IC ON/OFF
2	5V/0V	DF ON/OUT	32	5V/0V	Power ON/OFF
○●△3	0V	BUZZER	33	NC	
□3	NC		34	DATA	
4	PS		35	0V/5V	RESET ON/OFF
5, 6	5V		36	DATA	
7	0V	ALARM	37	DATA	
○●8	0V		38	5V/0V	ACC ON/OFF
△□8	NC		39	5V/0V	BATT ON/OFF
9	0V		40	5V	
10	0V/5V	DOLBY B ON/OFF	41, 42	OSC	
○●△11	0V/5V	DOLBY C ON/OFF	43	0V	
□11	NC		44	NC	
12	5V/0V	FF·REW/OTHER	45, 46	0V	
13	5V/0V	FOR/REV	47	0V/5V	CD Changer/EQ
14	5V/0V	TAPE・PLAY/OTHER	○●48	0V/5V	IN-INT ON/OFF
15, 16	0V		△□48	0V	
17	5V/0V	FF·REW/OTHER	49	—	
18	0V		50, 51	5V	
19	5V/0V	METAL/NORMAL	52, 53	0V	
20	5V/0V	PACK-IN/OUT	54	2.5V/5V	NOSE ON/OFF
21–23	DATA		55, 56	5V	
24	0V		57–59	DATA	
25	5V/0V	TAPE・PLAY/PAUSE	60, 61	5V	
26	0V		62–64	DATA	

	1	2	3	4	5	6	MODE
○●△Q201	0V/3.7V/0V	4.9V/4.9V/0V	0V/4.3V/8.2V	5V/0V/5V	0V/0V/0V	0V/0V/0V	NORMAL/DOLBY B/C

	E	C	B	MODE
Q061	4.9V	4.8V	4.2V	FM
Q062	0V	0V	9V	FM
Q071	0V	8.6V	0.9V	
Q072	4.8V	0V	4.8V	
Q501	5V/5V	5V/0V	4V/0V	NOSE P. ON/OFF
Q502	0V/0V	0V/4V	5V/0V	NOSE P. ON/OFF
○●△Q811	13.8V	0V	0V	

<Measuring Conditions>

1. Power Supply Voltage : DC14V
2. Measuring Meter : Digital Multi Meter
3. Measuring Point Reference : Between Ground
4. Measuring Conditions : No Signal Input
   FM : 98.1MHz
   AM : 999kHz (MW)
   TAPE: Blank Tape Play

NOTE: ○: For TDA-7556R Model Only,
●: For TDA-7659R Model Only,
△: For TDA-7552R Model Only,
□: For TDA-7550R Model Only,
Others : Common.

NOTE:

1. All resistance values are in ohms. K = 1,000
2. All capacitance values are in microfarads. $P = \frac{1}{1{,}000{,}000}$

Schematic Diagram (3/6)

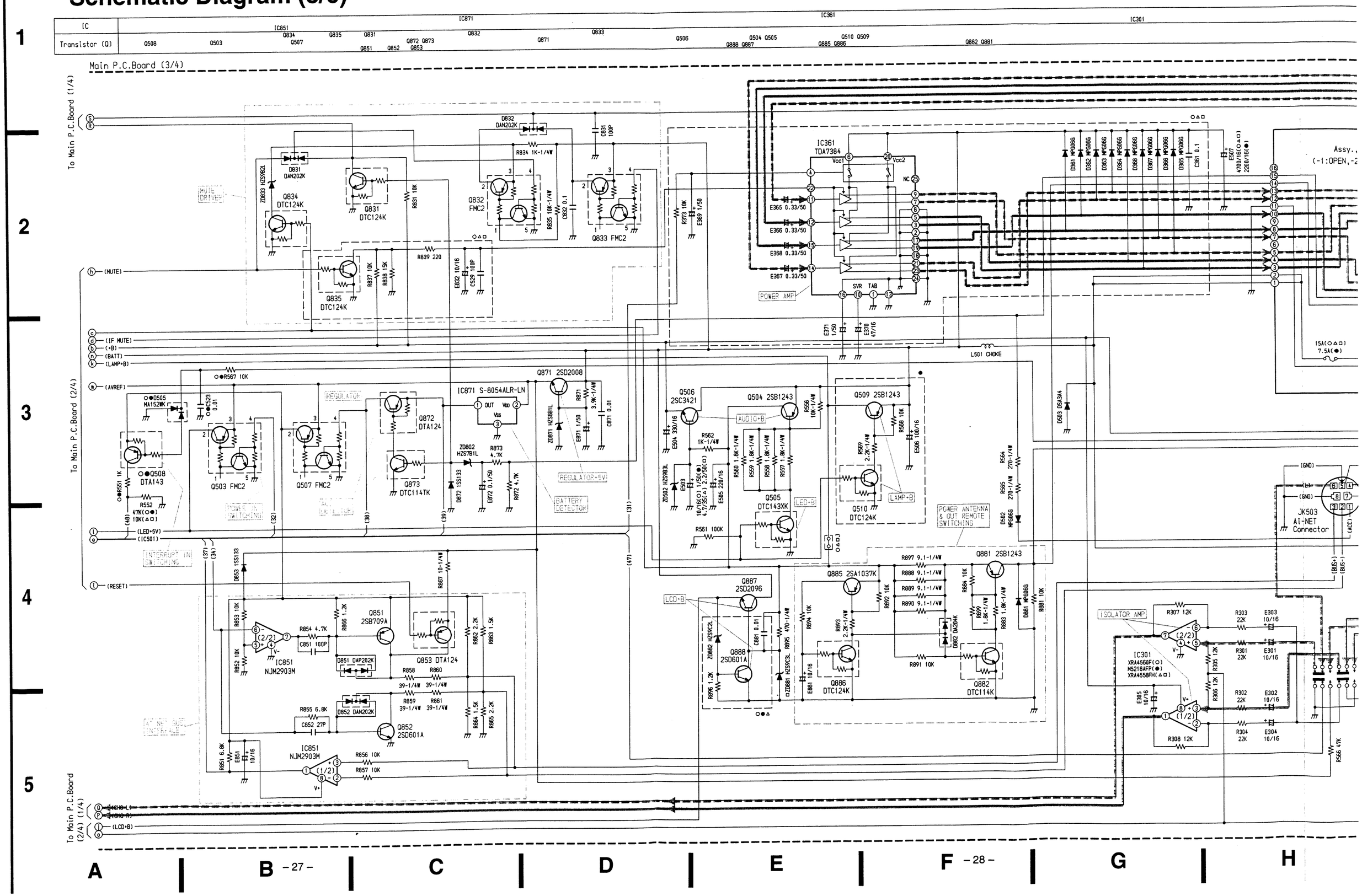

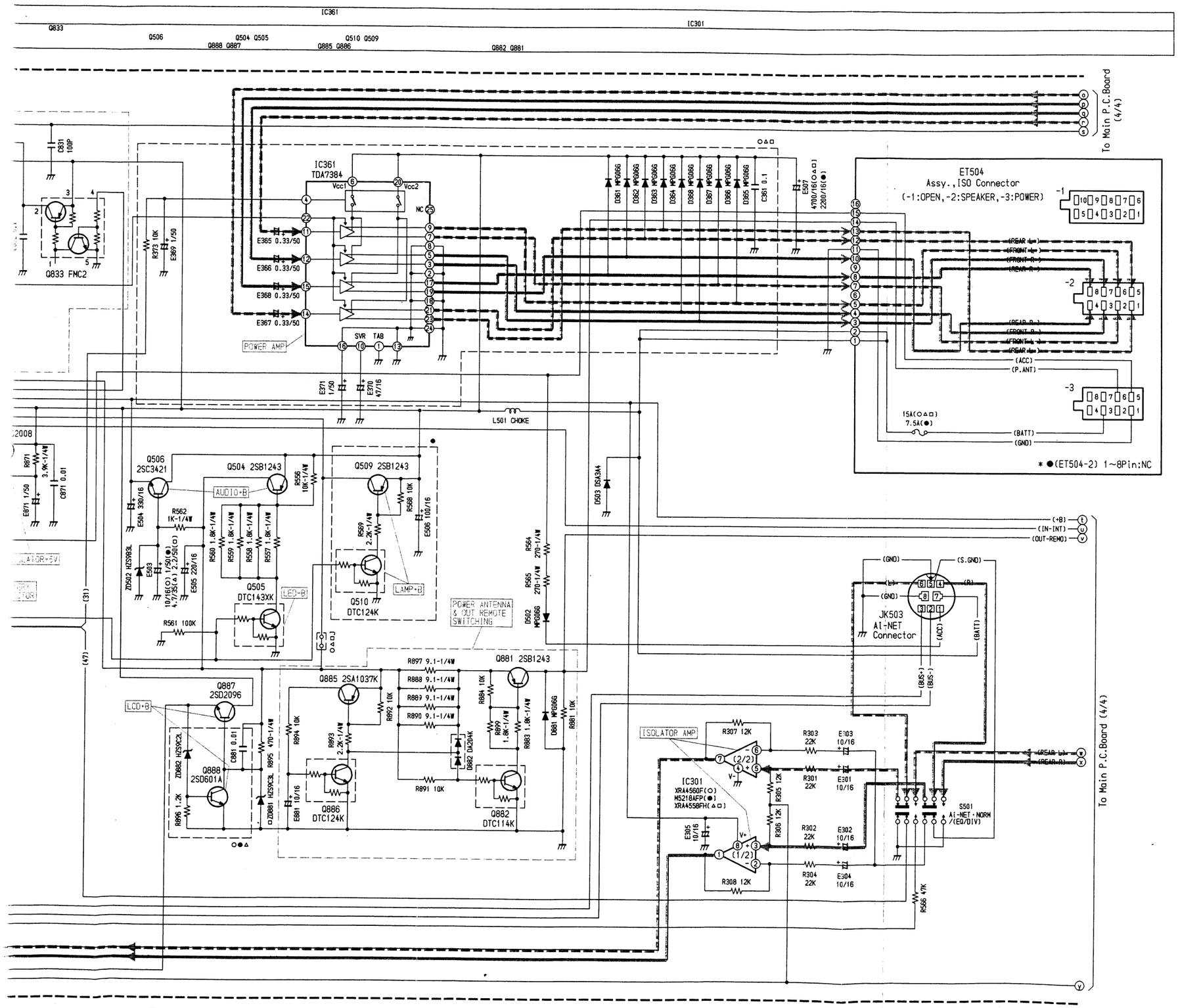

IC301

1~3	4.3V	CD Changer
4	0V	
5~7	4.3V	CD Changer
8	8.6V	

IC851

1	DATA	CD Changer
2	2.98V	CD Changer
3	0V	CD Changer
4	0V	
5	DATA	CD Changer
6	0V	CD Changer
7	5V	CD Changer
8	5V	

IC871

1	5V
2	5V
3	0V

○△□IC361

1, 2	0V		14, 15	Audio	
3	Audio		16	5V	FM
4	5V/0V	PWR IC ON/OFF	17	Audio	
5	Audio		18	0V	
6	13.8V		19	Audio	
7	Audio		20	13.8V	
8	0V		21	Audio	
9	Audio		22	0V/5V	MUTE ON/OFF
10	5V	FM	23	Audio	
11, 12	Audio		24, 25	NC	
13	0V				

	1	2	3	4	5	MODE
Q503	NC	5V/0V	5V/5V	5V/0V	0V/0V	POWER ON/OFF
Q507	NC	5V/0V	5V/5V	5V/0V	0V/0V	ACC ON/OFF
Q832	0V/13.8V	13.8V/0V	13.8V/13.8V	5V/0V	0V/0V	MUTE ON/OFF
Q833	NC	13.8V/0V	13.8V/13.8V	5V/0V	0V/0V	IF MUTE ON/OFF

	E	C	B	MODE
Q504	13.8V/13.8V	12V/0V	0V/13V	POWER ON/OFF
Q505	0V/0V	0V/13.8V	5V/0V	POWER ON/OFF
Q506	8.6V/0V	13.8V/13.8V	0V/9.2V	POWER ON/OFF
○●Q508	5V/5V	0V/4.9V	0V/4.9V	IN-INT ON/OFF
●Q509	13.7V/13.7V	13.7V/0V	0V/13V	POWER ON/OFF
●Q510	5V/5V	0V/13V	5V/0V	POWER ON/OFF
Q831	0V/9.1V	0V/0V	6.5V/0V	ACC ON/OFF
Q834	0V/0V	4.2V/0V	13.8V/13.8V	POWER ON/OFF
○△□Q835	5.4V	0V	0V	
Q851	5V	2V	5V	CD Changer
Q852	0V	2.99V	0V	CD Changer
Q853	5V/5V	2V/0V	5V/0V	RESET ON/OFF
Q871	5V	13.8V	5.6V	
Q872	5V/5V	5V/0V	0V/5V	ACC ON/OFF
Q873	0V/0V	0V/5V	5.6V/0V	ACC ON/OFF
Q881	13.7V	13.6V	13V	POWER ON
Q882	0V	7V	0V	POWER ON
Q885	13.7V	0V	13.7V	POWER ON
Q886	0V	13.6V	0V	POWER ON
Q887	13.8V/0V	13.8V/13.8V	0V/5V	POWER ON/OFF
○●△Q888	9.5V	13.8V	0.6V	

<Measuring Conditions>

1. Power Supply Voltage : DC14V
2. Measuring Meter : Digital Multi Meter
3. Measuring Point Reference : Between Ground
4. Measuring Conditions : No Signal Input
   FM : 98.1MHz
   AM : 999kHz (MW)
   TAPE: Blank Tape Play

NOTE: ○ : For TDA-7556R Model Only,
● : For TDA-7659R Model Only,
△ : For TDA-7552R Model Only,
□ : For TDA-7550R Model Only,
Others : Common.

NOTE:

1. All resistance values are in ohms. K = 1,000
2. All capacitance values are in microfarads. $P = \frac{1}{1,000,000}$

TDA-7556R/7659R/
TDA-7552R/7550R

Schematic Diagram (4/6)

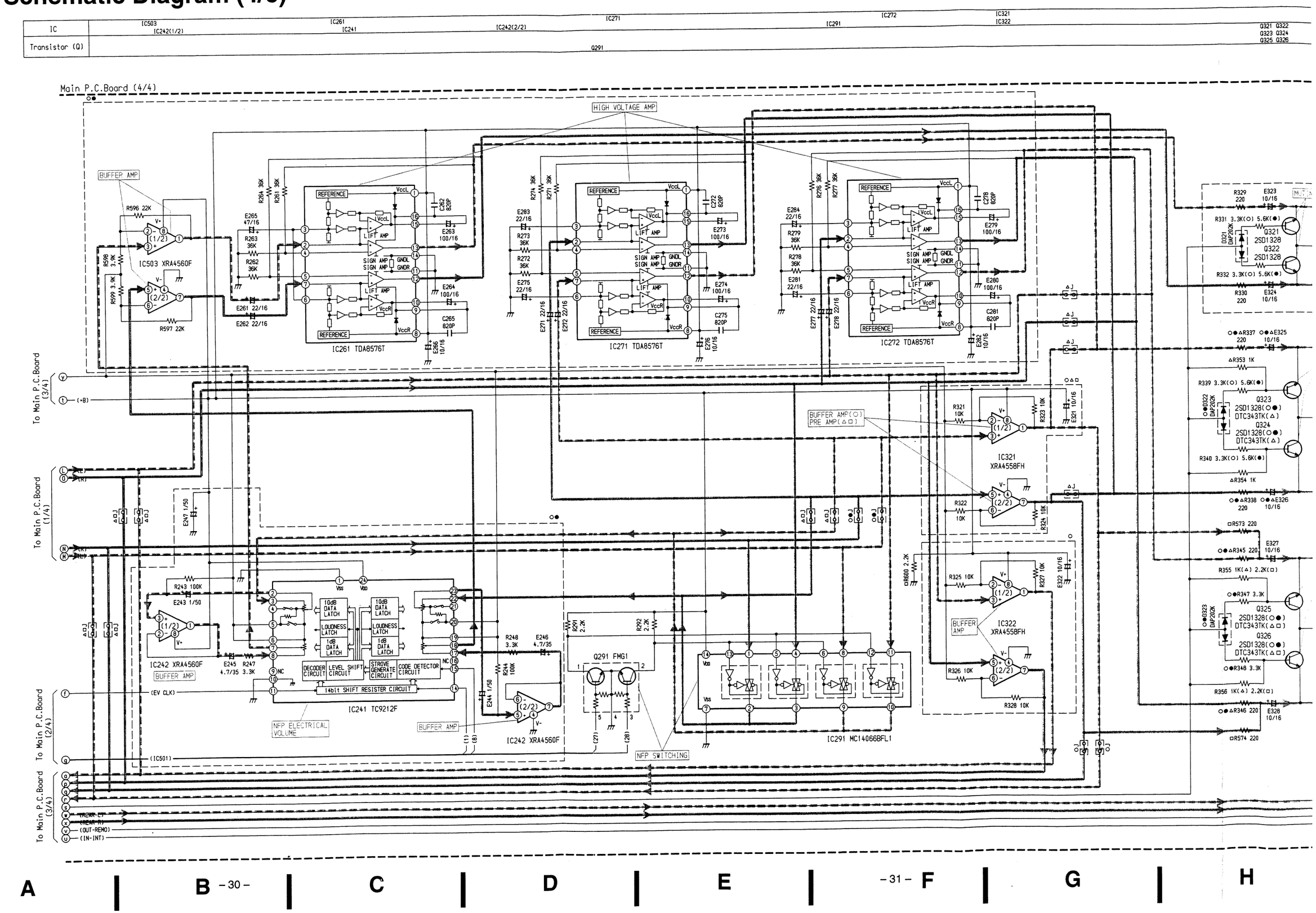

TDA-7556R/7659R/
TDA-7552R/7550R

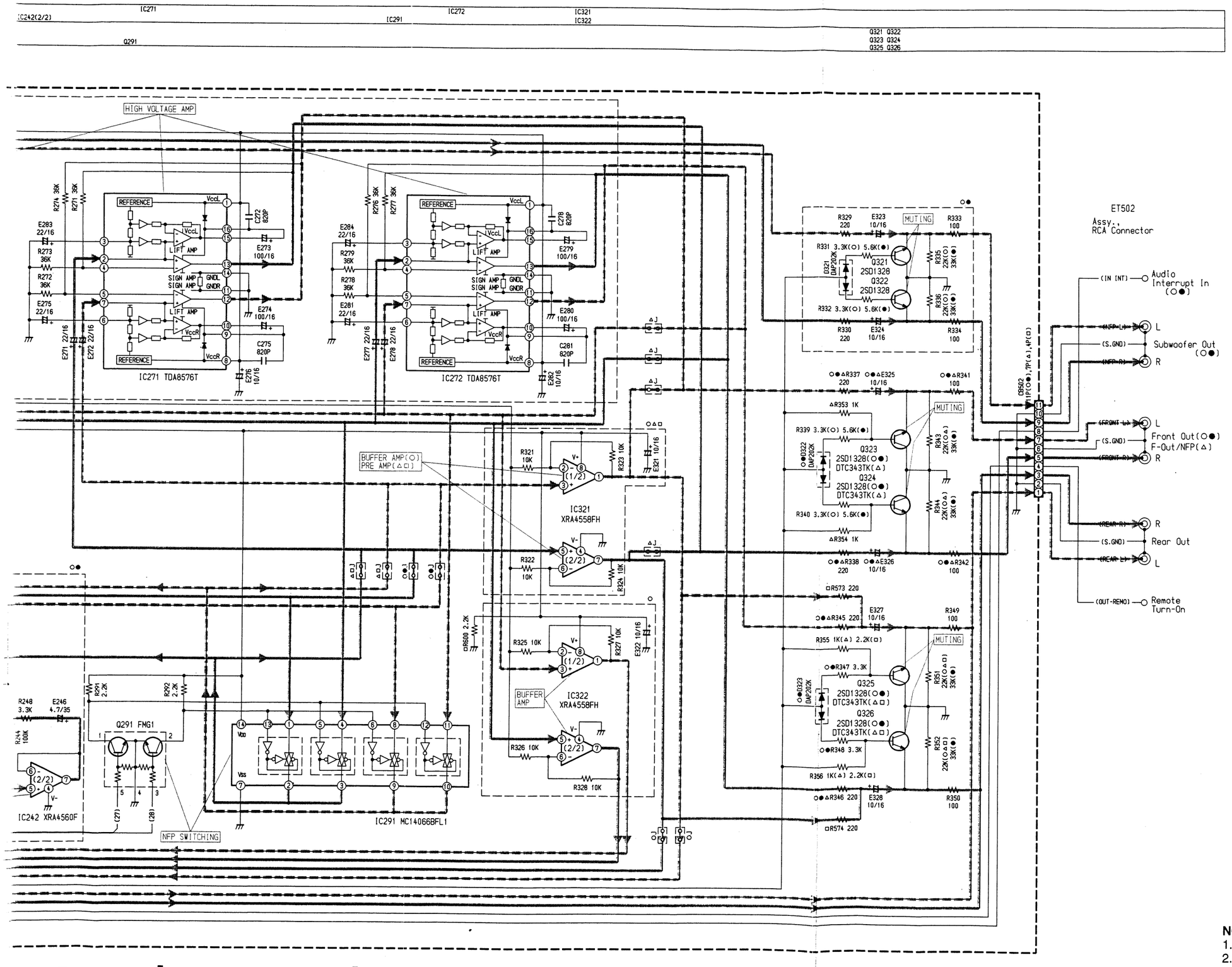

○●IC241

1	0V	13	NC
2, 3	4.3V	14	5V
4	NC	15	0V
5–8	4.3V	16	NC
9	NC	17–20	4.3V
10	0V	21	NC
11	5V	22, 23	4.3V
12	NC	24	8.6V

○●IC261, 271, 272

1	8.5V	10	2.7V
2, 3	3.6V	11	0V
4, 5	3.5V	12, 13	7.3V
6, 7	3.6V	14	0V
8	8.5V	15	2.6V
9	7.8V	16	7.8V

○●IC242

1–3	4.3V	FM
4	0V	
5–7	4.3V	FM
8	8.6V	

IC291

1–4	Audio	
5, 6	0V/8.5V	NFP SW ON/OFF
7	0V	
8–11	Audio	
12, 13	0V/8.5V	NFP SW ON/OFF
14	8.5V	

○△□IC321 ○IC322

1–3	4.3V	FM
4	0V	
5–7	4.3V	FM
8	8.6V	

○●IC503

1–3	4.3V
4	0V
5–7	4.3V
8	8.6V

	1	2	3	4	5	MODE
Q291	DATA	DATA	DATA	0V	DATA	NFP

	E	C	B	MODE
○●Q321	0V/0V	0V/0V	0V/13.8V	MUTE ON/OFF
○●Q322	0V/0V	0V/0V	0V/13.8V	MUTE ON/OFF
○●△Q323	0V/0V	0V/0V	0V/13.8V	MUTE ON/OFF
○●△Q324	0V/0V	0V/0V	0V/13.8V	MUTE ON/OFF
Q325	0V/0V	0V/0V	0V/13.8V	MUTE ON/OFF
Q326	0V/0V	0V/0V	0V/13.8V	MUTE ON/OFF

<Measuring Conditions>

1. Power Supply Voltage : DC14V
2. Measuring Meter : Digital Multi Meter
3. Measuring Point Reference : Between Ground
4. Measuring Conditions : No Signal Input
   FM : 98.1MHz
   AM : 999kHz (MW)
   TAPE: Blank Tape Play

NOTE: ○ : For TDA-7556R Model Only,
● : For TDA-7659R Model Only,
△ : For TDA-7552R Model Only,
□ : For TDA-7550R Model Only,
Others : Common.

NOTE:

1. All resistance values are in ohms. K = 1,000
2. All capacitance values are in microfarads. $P = \frac{1}{1,000,000}$

Schematic Diagram (5/6)

IC	IC401 IC402
Transistor (Q)	Q402 Q403 Q404 Q405 Q406 Q407 Q408 Q409 Q401

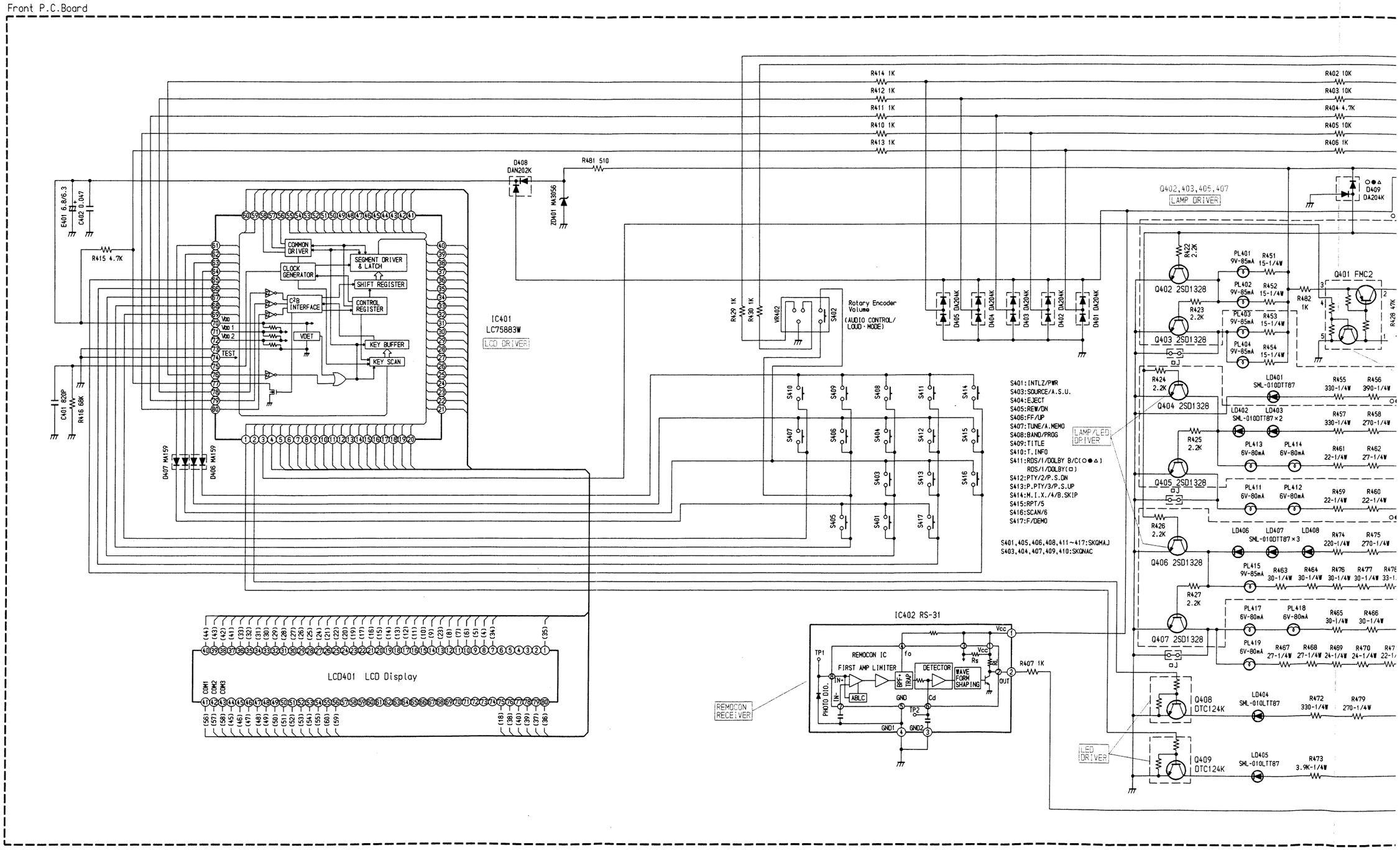

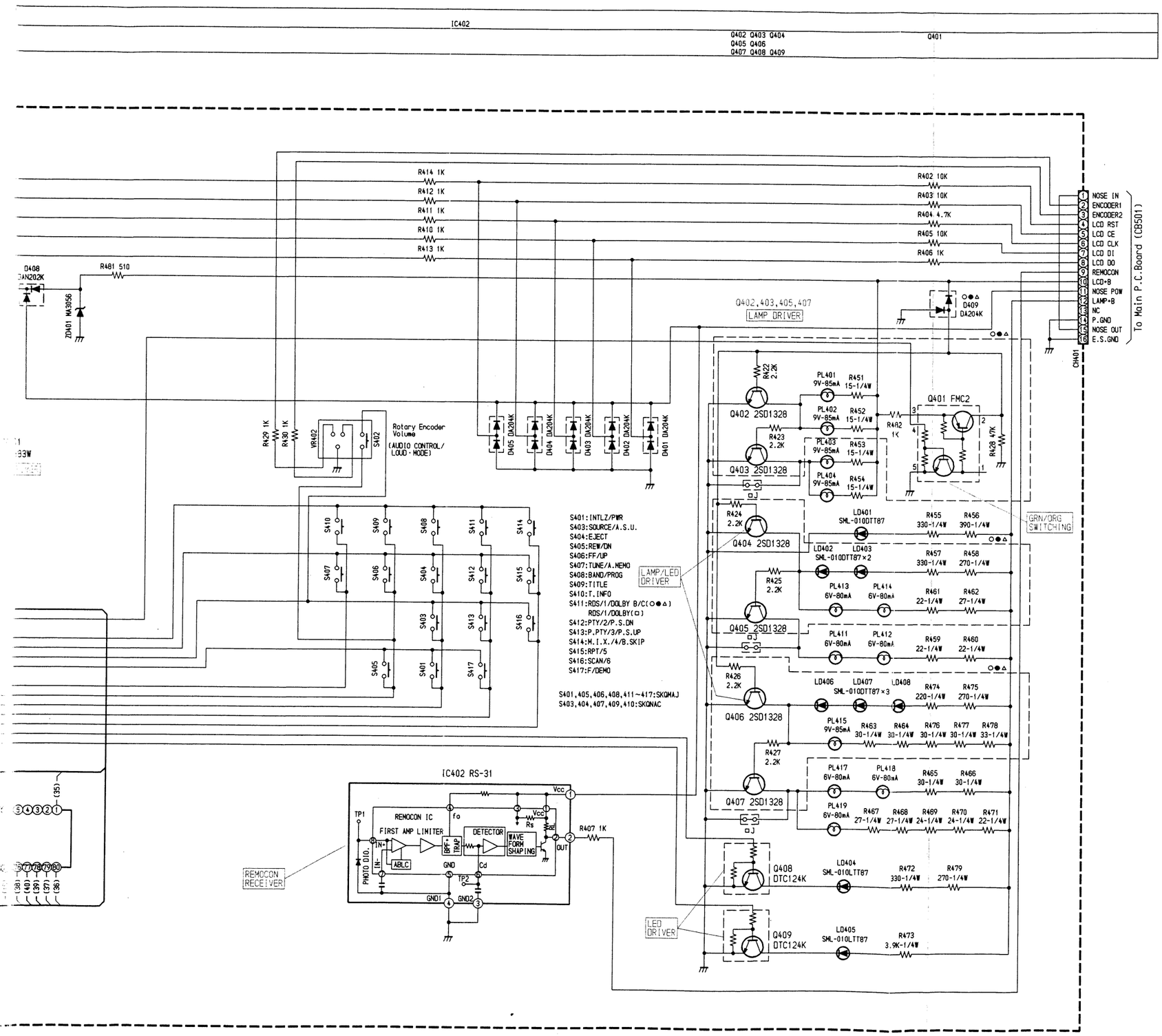

IC401

1, 2	5V
3	0V/5V
4~60	DATA
61~69	PS
70	5.6V
71, 72	NC
73, 74	0V
75	OSC
76	5V
77~80	DATA

IC402

1	5V
2	DATA
3	0V
4	0V

	1	2	3	4	5	MODE
○●△Q401	NC	9V/0V	9.6V/9.6V	0V/5V	0V/0V	GRN/ORG

	E	C	B	MODE
○●△Q402	0V/0V	13.8V/0V	0V/9V	GRN/ORG
○●△Q403	0V/0V	0V/13.8V	13.8V/0V	GRN/ORG
○●△Q404	0V/0V	13.8V/0V	0V/9V	GRN/ORG
○●△Q405	0V/0V	0V/13.8V	13.8V/0V	GRN/ORG
○●△Q406	0V/0V	13.8V/0V	0V/9V	GRN/ORG
○●△Q407	0V/0V	0V/13.8V	13.8V/0V	GRN/ORG
Q408	0V	0V	5V	
Q409	0V	0V	5V	

<Measuring Conditions>

1. Power Supply Voltage : DC14V
2. Measuring Meter : Digital Multi Meter
3. Measuring Point Reference : Between Ground
4. Measuring Conditions : No Signal Input
   FM : 98.1MHz
   AM : 999kHz (MW)
   TAPE: Blank Tape Play

NOTE: ○: For TDA-7556R Model Only,
●: For TDA-7659R Model Only,
△: For TDA-7552R Model Only,
□: For TDA-7550R Model Only,
Others : Common.

NOTE:

1. All resistance values are in ohms. K = 1,000
2. All capacitance values are in microfarads. $P = \frac{1}{1,000,000}$

TDA-7556R/7659R/
TDA-7552R/7550R

Schematic Diagram (6/6)

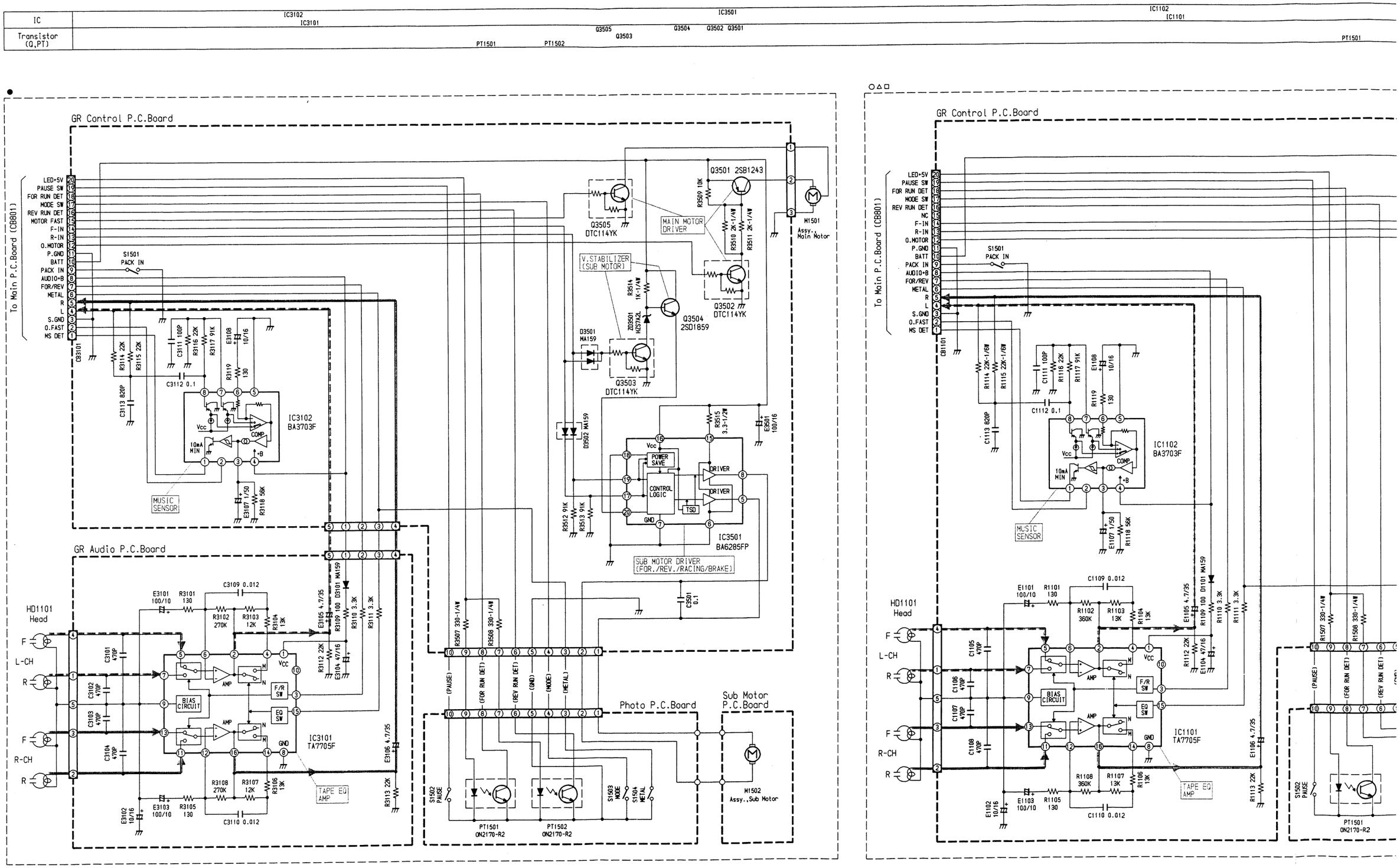

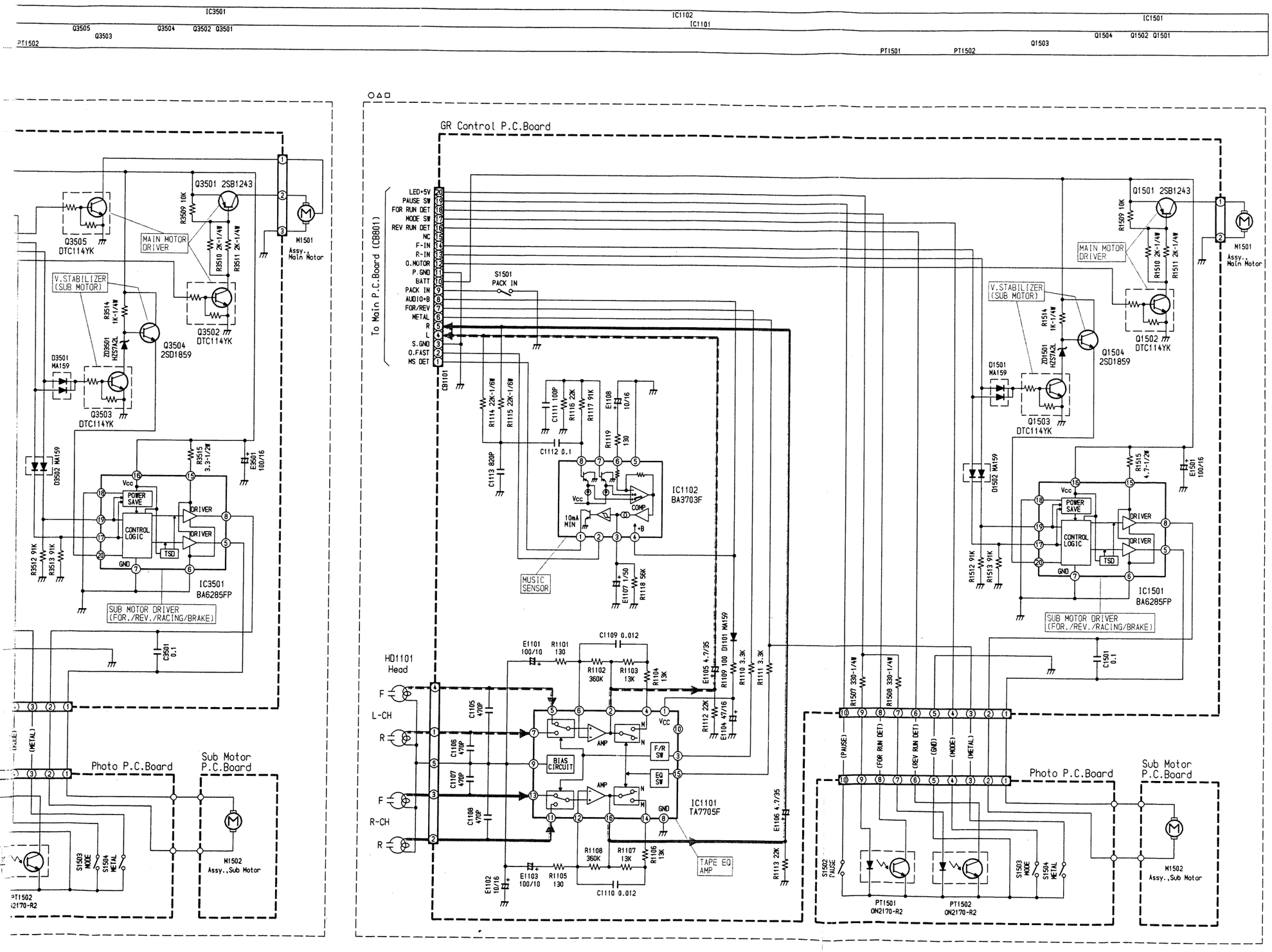

○△□IC1101
●IC3101

1	10.7V	9	3V
2	3.1V	10	NC
3	5.2V	11	3V
4	3.1V	12	3V
5	3V	13	3V
6	3V	14	3.1V
7	3V	15	0V
8	0V	16	3.1V

○△□IC1102
●IC3102

1	5.2V
2	0V
3	0V
4	12V
5	0V
6	0.6V
7	0V
8	0V

○△□IC1501
●IC3501

1~4	NC
5~8	0V
9~14	NC
15	12V
16	12V
17~19	0V
20	12V
21~24	NC

	E	C	B
○△□Q1501	12V	11.8V	11.3V
○△□Q1502	0V	0.1V	5V
○△□Q1503	0V	5.5V	0V
○△□Q1504	11.6V	12V	12V
●Q3501	12V	11.8V	11.3V
●Q3502	0V	0.1V	5V
●Q3503	0V	5.5V	0V
●Q3504	11.6V	12V	12V
●Q3505	0V	0.5V	0V

<Measuring Conditions>

1. Power Supply Voltage : DC12V
2. Measuring Meter : Digital Multi Meter
3. Measuring Point Reference : Between Ground
4. Measuring Conditions : No Signal Input
   FM : 98.1MHz
   AM : 999kHz (MW)
   TAPE: Blank Tape Play

NOTE: ○: For TDA-7556R Model Only,
●: For TDA-7659R Model Only,
△: For TDA-7552R Model Only,
□: For TDA-7550R Model Only,
Others : Common.

NOTE:

1. All resistance values are in ohms. K = 1,000
2. All capacitance values are in microfarads.

$$P = \frac{1}{1{,}000{,}000}$$

	Symbol No.	Part No.	Description
△	Q324	48T62967F33	CP., DTC343TK
○	Q325	48T63788F04	CP., 2SD1328
●	Q325	48T63788F04	CP., 2SD1328
△	Q325	48T62967F33	CP., DTC343TK
□	Q325	48T62967F33	CP., DTC343TK
○	Q326	48T63788F04	CP., 2SD1328
●	Q326	48T63788F04	CP., 2SD1328
△	Q326	48T62967F33	CP., DTC343TK
□	Q326	48T62967F33	CP., DTC343TK
	Q501	48T63420F01	CP., 2SA1037K
	Q502	48T62967F03	CP., DTC124K
	Q503	48T73888F12	CP., FMC2
	Q504	48T84366F01	2SB1243
	Q505	48T62967F05	CP., DTC143XK
	Q506	48T69176F01	2SC3421
	Q507	48T73888F12	CP., FMC2
○	Q508	48T62966F01	CP., DTA143
●	Q508	48T62966F01	CP., DTA143
●	Q509	48T84366F04	2SB1243
●	Q510	48T62967F03	CP., DTC124K
	Q511	48T62967F23	CP., DTC143TK
	Q512	48T62967F23	CP., DTC143TK
	Q513	48T62967F23	CP., DTC143TK
○	Q811	48T62967F03	CP., DTC124K
●	Q811	48T62967F03	CP., DTC124K
△	Q811	48T62967F03	CP., DTC124K
	Q831	48T62967F03	CP., DTC124K
	Q832	48T73888F12	CP., FMC2
	Q833	48T73888F12	CP., FMC2
	Q834	48T62967F03	CP., DTC124K
○	Q835	48T62967F03	CP., DTC124K
△	Q835	48T62967F03	CP., DTC124K
□	Q835	48T62967F03	CP., DTC124K
	Q851	48T52437F01	CP., 2SB709A
	Q852	48T52438F01	CP., 2SD601A
	Q853	48T62966F03	CP., DTA124
	Q871	48T15289W04	2SD2008
	Q872	48T62966F03	CP., DTA124
	Q873	48T62967F09	CP., DTC114TK
	Q881	48T84366F04	2SB1243
	Q882	48T62967F02	CP., DTC114K
	Q885	48T63420F01	CP., 2SA1037K
	Q886	48T62967F03	CP., DTC124K
	Q887	48T25169W01	2SD2096
○	Q888	48T52438F01	CP., 2SD601A
●	Q888	48T52438F01	CP., 2SD601A
△	Q888	48T52438F01	CP., 2SD601A

	Symbol No.	Part No.	Description
	Diodes / Surge Protector		
	D001	48T52446F01	CP., MA151WK
	D002	48T52446F01	CP., MA151WK
	D003	48T64134F01	CP., DA204K
	D071	48T68828F11	1SS133
○	D321	48T63463F01	CP., DAP202K
●	D321	48T63463F01	CP., DAP202K
○	D322	48T63463F01	CP., DAP202K
●	D322	48T63463F01	CP., DAP202K
○	D323	48T63463F01	CP., DAP202K
●	D323	48T63463F01	CP., DAP202K
○	D361	48T85270W02	MPG06G
△	D361	48T85270W02	MPG06G
□	D361	48T85270W02	MPG06G
○	D362	48T85270W02	MPG06G
△	D362	48T85270W02	MPG06G
□	D362	48T85270W02	MPG06G
○	D363	48T85270W02	MPG06G
△	D363	48T85270W02	MPG06G
□	D363	48T85270W02	MPG06G
○	D364	48T85270W02	MPG06G
△	D364	48T85270W02	MPG06G
□	D364	48T85270W02	MPG06G
○	D365	48T85270W02	MPG06G
△	D365	48T85270W02	MPG06G
□	D365	48T85270W02	MPG06G
○	D366	48T85270W02	MPG06G
△	D366	48T85270W02	MPG06G
□	D366	48T85270W02	MPG06G
○	D367	48T85270W02	MPG06G
△	D367	48T85270W02	MPG06G
□	D367	48T85270W02	MPG06G
○	D368	48T85270W02	MPG06G
△	D368	48T85270W02	MPG06G
□	D368	48T85270W02	MPG06G
	D501	48T68828F11	1SS133
	D502	48T85270W02	MPG06G
	D503	48T68580F03	DSA3A4
○	D505	48T25651W02	CP., MA152WK
●	D505	48T25651W02	CP., MA152WK
	D821	48T68828F11	1SS133
	D831	48T63462F01	CP., DAN202K
	D832	48T63462F01	CP., DAN202K
	D851	48T63463F01	CP., DAP202K
	D852	48T63462F01	CP., DAN202K
	D853	48T68828F11	1SS133

NOTE : ○ : For TDA-7556R Model Only, ● : For TDA-7659R Model Only, △ : For TDA-7552R Model Only, □ : For TDA-7550R Model Only, Others : Common.

Electrical Parts List

Resistor : Carbon resistors under 1/4 watts are not mentioned in the parts list, please confirm them by schematic diagram.

Capacitor : μF=microfarads,pF=picofarads

Abbreviations

RES.= Resistor	CAP.= Capacitor
C.F.= Carbon Film	ELY.= Electrolytic
M.F.= Metal Film	CER.= Ceramic
M.O.= Metal Oxide Film	MYL.= Mylar
M.P.= Metal Plate	TAN.= Tantalum
TR. = Transistor	POLY.= Polystyrol
TRANS.= Transformer	PP. = Polypropylene
CP. = Chip	PLT.= Polyethylene
	PF. = Polyester Film

Main P.C.Board

IC's

	Symbol No.	Part No.	Description
○	IC006	51T67915F01	M51143AL
●	IC006	51T67915F01	M51143AL
△	IC006	51T67915F01	M51143AL
	IC021	51T93336F01	NJM4558M
	IC022	51T40941U03	MC14066BFL1
	IC041	51T35504W02	LC7219
	IC061	51T55054W02	SAA6579T
	IC071	51T93336F01	NJM4558M
○	IC201	51T85167W01	CXA2502M
●	IC201	51T85167W01	CXA2502M
△	IC201	51T85167W01	CXA2502M
□	IC201	51T11210W01	CXA1102M
	IC221	51T65131W01	TEA6320T
○	IC222	51T92001F21	XRA4560F
●	IC222	51T92001F21	XRA4560F
△	IC222	51T65379F22	XRA4558FH
□	IC222	51T65379F22	XRA4558FH
○	IC241	51T75584W01	TC9212F
●	IC241	51T75584W01	TC9212F
○	IC242	51T92001F21	XRA4560F
●	IC242	51T92001F21	XRA4560F
○	IC261	51T75464W01	TDA8576T
●	IC261	51T75464W01	TDA8576T
○	IC271	51T75464W01	TDA8576T
●	IC271	51T75464W01	TDA8576T
○	IC272	51T75464W01	TDA8576T
●	IC272	51T75464W01	TDA8576T
	IC291	51T40941U03	MC14066BFL1
○	IC301	51T92001F21	XRA4560F
●	IC301	51T90149F03	M5218AFP
△	IC301	51T65379F22	XRA4558FH
□	IC301	51T65379F22	XRA4558FH
○	IC321	51T65379F22	XRA4558FH
△	IC321	51T65379F22	XRA4558FH
□	IC321	51T65379F22	XRA4558FH
○	IC322	51T65379F22	XRA4558FH
○	IC361	51T85153W01	TDA7384
△	IC361	51T85153W01	TDA7384
□	IC361	51T85153W01	TDA7384
	IC501	51T85151W08	85151W08
	IC502	51T85088W01	85088W01
○	IC503	51T92001F21	XRA4560F
●	IC503	51T92001F21	XRA4560F
	IC821	51T95014F13	S-8052HNM-CR
	IC841	51T65379F22	XRA4558FH
	IC851	51T93332F01	NJM2903M
	IC871	51T95014F09	S-8054ALR-LN

Transistors

	Symbol No.	Part No.	Description
	Q001	48T73888F08	CP., FMG1
	Q002	48T62967F03	CP., DTC124K
	Q003	48T73888F08	CP., FMG1
	Q004	48T73888F08	CP., FMG1
	Q021	48T62967F03	CP., DTC124K
	Q022	48T73888F08	CP., FMG1
	Q061	48T63420F01	CP., 2SA1037K
	Q062	48T62967F03	CP., DTC124K
	Q071	48T63417F01	CP., 2SC2412K
	Q072	48T63420F01	CP., 2SA1037K
	Q091	48T84234F03	2SB1238
	Q092	48T84234F03	2SB1238
	Q093	48T62967F03	CP., DTC124K
	Q094	48T15289W03	2SD2008
	Q095	48T93828F04	2SD1994A
○	Q201	48T94471F03	CP., IMH1
●	Q201	48T94471F03	CP., IMH1
△	Q201	48T94471F03	CP., IMH1
	Q291	48T73888F08	CP., FMG1
○	Q321	48T63788F04	CP., 2SD1328
●	Q321	48T63788F04	CP., 2SD1328
○	Q322	48T63788F04	CP., 2SD1328
●	Q322	48T63788F04	CP., 2SD1328
○	Q323	48T63788F04	CP., 2SD1328
●	Q323	48T63788F04	CP., 2SD1328
△	Q323	48T62967F33	CP., DTC343TK
○	Q324	48T63788F04	CP., 2SD1328
●	Q324	48T63788F04	CP., 2SD1328

NOTE : ○ : For TDA-7556R Model Only, ● : For TDA-7659R Model Only, △ : For TDA-7552R Model Only, □ : For TDA-7550R Model Only, Others : Common.

	Symbol No.	Part No.	Description
	D872	48T68828F11	1SS133
	D881	48T85270W02	MPG06G
	D882	48T64134F01	CP., DA204K
	ZD091	48T25766W24	Zener, HZS9C1L
	ZD092	48T25766W01	Zener, HZS6A1L
	ZD502	48T25766W23	Zener, HZS9B3L
	ZD802	48T25766W13	Zener, HZS7B1L
	ZD833	48T25766W22	Zener, HZS9B2L
	ZD871	48T25766W04	Zener, HZS6B1L
□	ZD881	48T25766W26	Zener, HZS9C3L
○	ZD882	48T25766W25	Zener, HZS9C2L
●	ZD882	48T25766W25	Zener, HZS9C2L
△	ZD882	48T25766W25	Zener, HZS9C2L
	DSP001	48T81048F02	Surge Protector, DSP-201M

Coils

	L071	24T25798W13	Inductor, 1mH
	L501	24T75055W06	Choke
	L502	24T65110W16	CP., 1μH
	L503	24T65110W16	CP., 1μH

Crystals

	X041	91T85169W43	7.2MHz
	X061	91T45118W18	4.332MHz
	X501	91T85169W49	8.3886MHz
	X502	91T85169W27	4.9152MHz

Filter / Buzzer

	BPF001	91T75257W01	Filter, LPF11830K
○	BZ801	50T25148W02	CB13PA-225
●	BZ801	50T25148W02	CB13PA-225
△	BZ801	50T25148W02	CB13PA-225

Switches

	S501	40T45282W01	Slide, SLD-42-508 (Ai-NET • NORM/(EQ/DIV))
	S821	40T75104W01	Tact,SKHLLB (RESET)

Capacitors

	C001	08S65128F69	CP., 0.01μF
	E002	23S75372W05	ELY., 22μF / 16V
	C003	08S65128F35	CP., 100pF
	E003	23S75372W14	ELY., 0.68μF / 50V

	Symbol No.	Part No.	Description
	C004	08T15399W01	CP., 0.022μF
	C005	08T15399W03	CP., 0.047μF
	C006	08T15399W01	CP., 0.022μF
	C007	08T15807W05	CP., 0.1μF
	C008	08T15399W01	CP., 0.022μF
	C009	08T15399W01	CP., 0.022μF
	C010	08S65128F35	CP., 100pF
	C021	08S65128F69	CP., 0.01μF
	E021	23S75373W06	ELY., 100μF / 16V
○	C022	08T55390W29	TF, 0.1μF
●	C022	08T35122W13	PF., 0.1μF
△	C022	08T35122W13	PF., 0.1μF
□	C022	08T35122W13	PF., 0.1μF
	E022	23S75372W02	ELY., 100μF / 10V
	C023	08S65128F69	CP., 0.01μF
	E023	23S75372W10	ELY., 0.1μF / 50V
	C024	08T15399W02	CP., 0.033μF
	E024	23S75372W04	ELY., 10μF / 16V
○	C025	08T55390W31	TF, 0.15μF
●	C025	08T35122W15	PF., 0.15μF
△	C025	08T35122W15	PF., 0.15μF
□	C025	08T35122W15	PF., 0.15μF
	E025	23S75372W14	ELY., 0.68μF / 50V
	C026	23S82372F19	ELY., (B.P) 2.2μF / 50V
	C027	08T15399W02	CP., 0.033μF
	C028	08S65128F69	CP., 0.01μF
	C029	08S65128F69	CP., 0.01μF
	C030	08T15399W01	CP., 0.022μF
	C041	08S82122F31	CP., 56pF
	E041	23S75372W05	ELY., 22μF / 16V
	C042	08T15399W01	CP., 0.022μF
	C043	08S82122F19	CP., 18pF
	C044	08S82122F19	CP., 18pF
○	C051	08S35374W01	CP., 0.1μF
●	C051	08S35374W01	CP., 0.1μF
△	C051	08S35374W01	CP., 0.1μF
○	E051	23S75372W06	ELY., 33μF / 16V
●	E051	23S75372W06	ELY., 33μF / 16V
△	E051	23S75372W06	ELY., 33μF / 16V
○	C052	08S82122F33	CP., 68pF
●	C052	08S82122F33	CP., 68pF
△	C052	08S82122F33	CP., 68pF
○	E052	23S75372W10	ELY., 0.1μF / 50V
●	E052	23S75372W10	ELY., 0.1μF / 50V
△	E052	23S75372W10	ELY., 0.1μF / 50V
○	E053	23S75372W15	ELY., 1μF / 50V
●	E053	23S75372W15	ELY., 1μF / 50V

NOTE : ○ : For TDA-7556R Model Only, ● : For TDA-7659R Model Only, △ : For TDA-7552R Model Only,
□ : For TDA-7550R Model Only, Others : Common.

	Symbol No.	Part No.	Description
△	E053	23S75372W15	ELY., 1μF / 50V
○	E054	23S75372W04	ELY., 10μF / 16V
●	E054	23S75372W04	ELY., 10μF / 16V
△	E054	23S75372W04	ELY., 10μF / 16V
	C061	08S82122F23	CP., 27pF
	E061	23S75372W04	ELY., 10μF / 16V
	C062	08S82122F23	CP., 27pF
	E062	23S75372W16	ELY., 2.2μF / 50V
	C063	08S82122F49	CP., 330pF
	E063	23S75372W04	ELY., 10μF / 16V
	C064	08S65128F53	CP., 560pF
	C071	08S65128F69	CP., 0.01μF
	E071	23S75372W10	ELY., 0.1μF / 50V
	C072	08S65128F56	CP., 820pF
	C073	08T15399W01	CP., 0.022μF
	C074	08S65128F35	CP., 100pF
	C075	08S65128F69	CP., 0.01μF
	C076	08S65128F61	CP., 2200pF
	C077	08S65128F69	CP., 0.01μF
	C078	08S65128F81	CP., 0.039μF
	C091	08T15399W01	CP., 0.022μF
	E091	23S75372W03	ELY., 220μF / 10V
	C092	08T15399W01	CP., 0.022μF
	E092	23S75372W04	ELY., 10μF / 16V
○	C201	08T55390W27	TF, 0.068μF
●	C201	08T35122W11	PF., 0.068μF
△	C201	08T35122W11	PF., 0.068μF
	E201	23S75372W15	ELY., 1μF / 50V
○	C202	08T55390W27	TF, 0.068μF
●	C202	08T35122W11	PF., 0.068μF
△	C202	08T35122W11	PF., 0.068μF
	E202	23S75372W15	ELY., 1μF / 50V
	E203	23S75372W04	ELY., 10μF / 16V
	E204	23S75372W09	ELY., 4.7μF / 35V
○	E205	23S75372W10	ELY., 0.1μF / 50V
●	E205	23S75372W10	ELY., 0.1μF / 50V
△	E205	23S75372W10	ELY., 0.1μF / 50V
□	E205	23S75372W14	ELY., 0.68μF / 50V
○	E206	23S75372W10	ELY., 0.1μF / 50V
●	E206	23S75372W10	ELY., 0.1μF / 50V
△	E206	23S75372W10	ELY., 0.1μF / 50V
□	E206	23S75372W14	ELY., 0.68μF / 50V
○	E207	23S75372W04	ELY., 10μF / 16V
●	E207	23S75372W04	ELY., 10μF / 16V
△	E207	23S75372W04	ELY., 10μF / 16V
□	E207	23S75372W05	ELY., 22μF / 16V
○	C221	08T55390W23	TF, 0.033μF

	Symbol No.	Part No.	Description
●	C221	08T35122W07	PF., 0.033μF
△	C221	08T35122W07	PF., 0.033μF
	E221	23S75372W15	ELY., 1μF / 50V
○	C222	08T55390W23	TF, 0.033μF
●	C222	08T35122W07	PF., 0.033μF
△	C222	08T35122W07	PF., 0.033μF
	E222	23S75372W15	ELY., 1μF / 50V
○	C223	08T55390W14	PF., 5600pF
●	C223	08T55390W14	PF., 5600pF
△	C223	08T55390W14	PF., 5600pF
	E223	23S75372W09	ELY., 4.7μF / 35V
○	C224	08T55390W14	PF., 5600pF
●	C224	08T55390W14	PF., 5600pF
△	C224	08T55390W14	PF., 5600pF
	E224	23S75372W09	ELY., 4.7μF / 35V
□	C225	08T15399W02	CP., 0.033μF
□	C226	08T15399W02	CP., 0.033μF
□	C227	08S65128F66	CP., 5600pF
	E227	23S75372W15	ELY., 1μF / 50V
□	C228	08S65128F66	CP., 5600pF
	E228	23S75372W02	ELY., 100μF / 10V
	C229	08S65128F69	CP., 0.01μF
	E229	23S75372W15	ELY., 1μF / 50V
	E230	23S75372W15	ELY., 1μF / 50V
	E231	23S75372W15	ELY., 1μF / 50V
	E232	23S75372W07	ELY., 47μF / 16V
○	E243	23S75372W15	ELY., 1μF / 50V
●	E243	23S75372W15	ELY., 1μF / 50V
○	E244	23S75372W15	ELY., 1μF / 50V
●	E244	23S75372W15	ELY., 1μF / 50V
○	E245	23S75372W09	ELY., 4.7μF / 35V
●	E245	23S75372W09	ELY., 4.7μF / 35V
○	E246	23S75372W09	ELY., 4.7μF / 35V
●	E246	23S75372W09	ELY., 4.7μF / 35V
○	E247	23S75372W15	ELY., 1μF / 50V
●	E247	23S75372W15	ELY., 1μF / 50V
○	E261	23S75372W05	ELY., 22μF / 16V
●	E261	23S75372W05	ELY., 22μF / 16V
○	C262	08S65128F56	CP., 820pF
●	C262	08S65128F56	CP., 820pF
○	E262	23S75372W05	ELY., 22μF / 16V
●	E262	23S75372W05	ELY., 22μF / 16V
○	E263	23S75372W08	ELY., 100μF / 16V
●	E263	23S75372W08	ELY., 100μF / 16V
○	E264	23S75372W08	ELY., 100μF / 16V
●	E264	23S75372W08	ELY., 100μF / 16V
○	C265	08S65128F56	CP., 820pF

NOTE : ○ : For TDA-7556R Model Only, ● : For TDA-7659R Model Only, △ : For TDA-7552R Model Only,
□ : For TDA-7550R Model Only, Others : Common.

	Symbol No.	Part No.	Description
●	C265	08S65128F56	CP., 820pF
○	E265	23S75372W07	ELY., 47μF / 16V
●	E265	23S75372W07	ELY., 47μF / 16V
○	E266	23S75372W04	ELY., 10μF / 16V
●	E266	23S75372W04	ELY., 10μF / 16V
○	E271	23S75372W05	ELY., 22μF / 16V
●	E271	23S75372W05	ELY., 22μF / 16V
○	C272	08S65128F56	CP., 820pF
●	C272	08S65128F56	CP., 820pF
○	E272	23S75372W05	ELY., 22μF / 16V
●	E272	23S75372W05	ELY., 22μF / 16V
○	E273	23S75372W08	ELY., 100μF / 16V
●	E273	23S75372W08	ELY., 100μF / 16V
○	E274	23S75372W08	ELY., 100μF / 16V
●	E274	23S75372W08	ELY., 100μF / 16V
○	C275	08S65128F56	CP., 820pF
●	C275	08S65128F56	CP., 820pF
○	E275	23S75372W05	ELY., 22μF / 16V
●	E275	23S75372W05	ELY., 22μF / 16V
○	E276	23S75372W04	ELY., 10μF / 16V
●	E276	23S75372W04	ELY., 10μF / 16V
○	E277	23S75372W05	ELY., 22μF / 16V
●	E277	23S75372W05	ELY., 22μF / 16V
○	C278	08S65128F56	CP., 820pF
●	C278	08S65128F56	CP., 820pF
○	E278	23S75372W05	ELY., 22μF / 16V
●	E278	23S75372W05	ELY., 22μF / 16V
○	E279	23S75372W08	ELY., 100μF / 16V
●	E279	23S75372W08	ELY., 100μF / 16V
○	E280	23S75372W08	ELY., 100μF / 16V
●	E280	23S75372W08	ELY., 100μF / 16V
○	C281	08S65128F56	CP., 820pF
●	C281	08S65128F56	CP., 820pF
○	E281	23S75372W05	ELY., 22μF / 16V
●	E281	23S75372W05	ELY., 22μF / 16V
○	E282	23S75372W04	ELY., 10μF / 16V
●	E282	23S75372W04	ELY., 10μF / 16V
○	E283	23S75372W05	ELY., 22μF / 16V
●	E283	23S75372W05	ELY., 22μF / 16V
○	E284	23S75372W05	ELY., 22μF / 16V
●	E284	23S75372W05	ELY., 22μF / 16V
	E301	23S75372W04	ELY., 10μF / 16V
	E302	23S75372W04	ELY., 10μF / 16V
	E303	23S75372W04	ELY., 10μF / 16V
	E304	23S75372W04	ELY., 10μF / 16V
	E305	23S75372W04	ELY., 10μF / 16V
○	E321	23S75372W04	ELY., 10μF / 16V

	Symbol No.	Part No.	Description
△	E321	23S75372W04	ELY., 10μF / 16V
□	E321	23S75372W04	ELY., 10μF / 16V
○	E322	23S75372W04	ELY., 10μF / 16V
○	E323	23S75372W04	ELY., 10μF / 16V
●	E323	23S75372W04	ELY., 10μF / 16V
○	E324	23S75372W04	ELY., 10μF / 16V
●	E324	23S75372W04	ELY., 10μF / 16V
○	E325	23S75372W04	ELY., 10μF / 16V
●	E325	23S75372W04	ELY., 10μF / 16V
△	E325	23S75372W04	ELY., 10μF / 16V
○	E326	23S75372W04	ELY., 10μF / 16V
●	E326	23S75372W04	ELY., 10μF / 16V
△	E326	23S75372W04	ELY., 10μF / 16V
	E327	23S75372W04	ELY., 10μF / 16V
	E328	23S75372W04	ELY., 10μF / 16V
○	C361	08T15807W05	CP., 0.1μF
△	C361	08T15807W05	CP., 0.1μF
□	C361	08T15807W05	CP., 0.1μF
○	E365	23T75478W35	ELY., 0.33μF / 50V
△	E365	23T75478W35	ELY., 0.33μF / 50V
□	E365	23T75478W35	ELY., 0.33μF / 50V
○	E366	23T75478W35	ELY., 0.33μF / 50V
△	E366	23T75478W35	ELY., 0.33μF / 50V
□	E366	23T75478W35	ELY., 0.33μF / 50V
○	E367	23T75478W35	ELY., 0.33μF / 50V
△	E367	23T75478W35	ELY., 0.33μF / 50V
□	E367	23T75478W35	ELY., 0.33μF / 50V
○	E368	23T75478W35	ELY., 0.33μF / 50V
△	E368	23T75478W35	ELY., 0.33μF / 50V
□	E368	23T75478W35	ELY., 0.33μF / 50V
○	E369	23T75478W37	ELY., 1μF / 50V
△	E369	23T75478W37	ELY., 1μF / 50V
□	E369	23T75478W37	ELY., 1μF / 50V
○	E370	23T75478W18	ELY., 47μF / 16V
△	E370	23T75478W18	ELY., 47μF / 16V
□	E370	23T75478W18	ELY., 47μF / 16V
○	E371	23T75478W37	ELY., 1μF / 50V
△	E371	23T75478W37	ELY., 1μF / 50V
□	E371	23T75478W37	ELY., 1μF / 50V
	C501	08S65128F69	CP., 0.01μF
	E501	23S75372W03	ELY., 220μF / 10V
	C502	08S82122F21	CP., 22pF
	E502	23S75372W02	ELY., 100μF / 10V
	C503	08S82122F21	CP., 22pF
○	E503	23S75372W04	ELY., 10μF / 16V
●	E503	23S75372W15	ELY., 1μF / 50V
△	E503	23S75372W09	ELY., 4.7μF / 35V

NOTE : ○ : For TDA-7556R Model Only, ● : For TDA-7659R Model Only, △ : For TDA-7552R Model Only,
□ : For TDA-7550R Model Only, Others : Common.

	Symbol No.	Part No.	Description
□	E503	23S75372W16	ELY., 2.2μF / 50V
	C504	08T15399W01	CP., 0.022μF
	E504	23T00149L27	ELY., 330μF / 16V
	E505	23T00149L26	ELY., 220μF / 16V
●	E506	23S75373W06	ELY., 100μF / 16V
	C507	08S82122F23	CP., 27pF
○	E507	23T75346W02	ELY., 4700μF / 16V
●	E507	23T75346W01	ELY., 2200μF / 16V
△	E507	23T75346W02	ELY., 4700μF / 16V
□	E507	23T75346W02	ELY., 4700μF / 16V
	C508	08S82122F22	CP., 24pF
	E508	23S75372W15	ELY., 1μF / 50V
	C509	08T15399W01	CP., 0.022μF
	E509	23S75372W15	ELY., 1μF / 50V
	E510	23S75372W04	ELY., 10μF / 16V
	C511	08S65128F35	CP., 100pF
	E511	23S75372W15	ELY., 1μF / 50V
	C513	08S65128F35	CP., 100pF
	C514	08S65128F35	CP., 100pF
	C515	08S65128F35	CP., 100pF
	C517	08S65128F35	CP., 100pF
	C521	08S65128F35	CP., 100pF
	C522	08S65128F35	CP., 100pF
○	C523	08S65128F69	CP., 0.01μF
●	C523	08S65128F69	CP., 0.01μF
	C526	08T15399W01	CP., 0.022μF
	C527	08T15399W01	CP., 0.022μF
○	C529	08S65128F35	CP., 100pF
△	C529	08S65128F35	CP., 100pF
□	C529	08S65128F35	CP., 100pF
	C530	08S65128F69	CP., 0.01μF
	C532	08S65128F35	CP., 100pF
	C801	08S65128F35	CP., 100pF
	E821	23S75372W04	ELY., 10μF / 16V
	C831	08S53332F23	CP., 100pF
	C832	08T15807W05	CP., 0.1μF
○	E832	23S75372W04	ELY., 10μF / 16V
△	E832	23S75372W04	ELY., 10μF / 16V
□	E832	23S75372W04	ELY., 10μF / 16V
	E841	23S75372W02	ELY., 100μF / 10V
	E843	23S75372W09	ELY., 4.7μF / 35V
	C851	08S82122F37	CP., 100pF
	E851	23S75372W04	ELY., 10μF / 16V
	C852	08S82122F23	CP., 27pF
	C871	08S65128F69	CP., 0.01μF
	E871	23S75372W15	ELY., 1μF / 50V
	E872	23S75372W10	ELY., 0.1μF / 50V

	Symbol No.	Part No.	Description
○	C881	08S65128F69	CP., 0.01μF
●	C881	08S65128F69	CP., 0.01μF
△	C881	08S65128F69	CP., 0.01μF
	E881	23S75372W04	ELY., 10μF / 16V

	Resistors		(All resistors are chip 1/10W±5% unless otherwise noted.)
	R001	06S64995F53	1K ohm
	R002	06S64995F77	10K ohm
	R004	06S64995F77	10K ohm
	R005	06S64995F77	10K ohm
	R006	06S64995F81	15K ohm
	R007	06S64995F61	2.2K ohm
	R008	06S64995F53	1K ohm
	R009	06S64995F61	2.2K ohm
	R014	06S64995F77	10K ohm
	R021	06S64995F53	1K ohm
	R022	06S64995F53	1K ohm
	R023	06S64995F61	2.2K ohm
	R024	06S64995F61	2.2K ohm
	R025	06S64995F29	100 ohm
	R026	06S64995F83	18K ohm
	R027	06S64995F85	22K ohm
	R028	06S64995F53	1K ohm
	R029	06S64995F71	5.6K ohm
	R030	06S70072F29	100 ohm 1/4W
	R031	06S64995F77	10K ohm
	R032	06S64995F61	2.2K ohm
	R033	06S64995F53	1K ohm
	R034	06S64995F53	1K ohm
	R041	06S64995F53	1K ohm
	R042	06S64995F93	47K ohm
	R043	06S64995F53	1K ohm
	R044	06S64995F93	47K ohm
○	R051	06S64995F89	33K ohm
●	R051	06S64995F89	33K ohm
△	R051	06S64995F89	33K ohm
○	R052	06S64995F89	33K ohm
●	R052	06S64995F89	33K ohm
△	R052	06S64995F89	33K ohm
○	R053	06S64996F26	1M ohm
●	R053	06S64996F26	1M ohm
△	R053	06S64996F26	1M ohm
○	R054	06S64996F01	91K ohm
●	R054	06S64996F01	91K ohm
△	R054	06S64996F01	91K ohm

NOTE : ○ : For TDA-7556R Model Only, ● : For TDA-7659R Model Only, △ : For TDA-7552R Model Only, □ : For TDA-7550R Model Only, Others : Common.

	Symbol No.	Part No.	Description
	R061	06S64995F61	2.2K ohm
	R062	06S64995F69	4.7K ohm
	R063	06S64995F77	10K ohm
	R064	06S64995F53	1K ohm
	R065	06S64995F53	1K ohm
	R071	06S64996F02	100K ohm
	R072	06S64995F77	10K ohm
	R073	06S64995F81	15K ohm
	R074	06S64996F10	220K ohm
	R075	06S64996F14	330K ohm
	R076	06S64995F29	100 ohm
	R077	06S64995F77	10K ohm
	R078	06S64996F04	120K ohm
	R079	06S64995F13	22 ohm
	R080	06S64996F02	100K ohm
	R081	06S64996F02	100K ohm
	R091	06S64995F65	3.3K ohm
	R092	06S64995F53	1K ohm
	R093	06S70072F61	2.2K ohm 1/4W
	R094	06S64995F77	10K ohm
	R095	06S70072F41	330 ohm 1/4W
	R096	06S53330F73	6.8K ohm 1/8W
	R201	06S64996F30	2.2M ohm
	R202	06S64996F30	2.2M ohm
	R203	06S64995F62	2.4K ohm
	R204	06S64995F62	2.4K ohm
	R205	06S64995F59	1.8K ohm
	R206	06S64995F59	1.8K ohm
○	R207	06S64995F84	20K ohm
●	R207	06S64995F84	20K ohm
△	R207	06S64995F84	20K ohm
□	R207	06S64995F92	43K ohm
○	R208	06S64995F79	12K ohm
●	R208	06S64995F79	12K ohm
△	R208	06S64995F79	12K ohm
○	R209	06S64995F37	220 ohm
●	R209	06S64995F37	220 ohm
△	R209	06S64995F37	220 ohm
○	R210	06S64995F75	8.2K ohm
●	R210	06S64995F75	8.2K ohm
△	R210	06S64995F75	8.2K ohm
□	R211	06S64995F69	4.7K ohm
	R221	06S64995F77	10K ohm
	R222	06S64995F77	10K ohm
	R223	06S64995F77	10K ohm
	R224	06S64995F77	10K ohm
○	R243	06S64996F02	100K ohm

	Symbol No.	Part No.	Description
●	R243	06S64996F02	100K ohm
○	R244	06S64996F02	100K ohm
●	R244	06S64996F02	100K ohm
○	R247	06S64995F65	3.3K ohm
●	R247	06S64995F65	3.3K ohm
○	R248	06S64995F65	3.3K ohm
●	R248	06S64995F65	3.3K ohm
○	R261	06S64995F90	36K ohm
●	R261	06S64995F90	36K ohm
○	R262	06S64995F90	36K ohm
●	R262	06S64995F90	36K ohm
○	R263	06S64995F90	36K ohm
●	R263	06S64995F90	36K ohm
○	R264	06S64995F90	36K ohm
●	R264	06S64995F90	36K ohm
○	R271	06S64995F90	36K ohm
●	R271	06S64995F90	36K ohm
○	R272	06S64995F90	36K ohm
●	R272	06S64995F90	36K ohm
○	R273	06S64995F90	36K ohm
●	R273	06S64995F90	36K ohm
○	R274	06S64995F90	36K ohm
●	R274	06S64995F90	36K ohm
○	R276	06S64995F90	36K ohm
●	R276	06S64995F90	36K ohm
○	R277	06S64995F90	36K ohm
●	R277	06S64995F90	36K ohm
○	R278	06S64995F90	36K ohm
●	R278	06S64995F90	36K ohm
○	R279	06S64995F90	36K ohm
●	R279	06S64995F90	36K ohm
	R291	06S64995F61	2.2K ohm
	R292	06S64995F61	2.2K ohm
	R301	06T15443W85	22K ohm
	R302	06T15443W85	22K ohm
	R303	06T15443W85	22K ohm
	R304	06T15443W85	22K ohm
	R305	06T15443W79	12K ohm
	R306	06T15443W79	12K ohm
	R307	06T15443W79	12K ohm
	R308	06T15443W79	12K ohm
○	R321	06S64995F77	10K ohm
○	R322	06S64995F77	10K ohm
○	R323	06S64995F77	10K ohm
○	R324	06S64995F77	10K ohm
○	R325	06S64995F77	10K ohm
○	R326	06S64995F77	10K ohm

NOTE : ○ : For TDA-7556R Model Only, ● : For TDA-7659R Model Only, △ : For TDA-7552R Model Only,
□ : For TDA-7550R Model Only, Others : Common.

	Symbol No.	Part No.	Description
○	R327	06S64995F77	10K ohm
○	R328	06S64995F77	10K ohm
○	R329	06S64995F37	220 ohm
●	R329	06S64995F37	220 ohm
○	R330	06S64995F37	220 ohm
●	R330	06S64995F37	220 ohm
○	R331	06S64995F65	3.3K ohm
●	R331	06S64995F71	5.6K ohm
○	R332	06S64995F65	3.3K ohm
●	R332	06S64995F71	5.6K ohm
○	R333	06S64995F29	100 ohm
●	R333	06S64995F29	100 ohm
○	R334	06S64995F29	100 ohm
●	R334	06S64995F29	100 ohm
○	R335	06S64995F85	22K ohm
●	R335	06S64995F89	33K ohm
○	R336	06S64995F85	22K ohm
●	R336	06S64995F89	33K ohm
○	R337	06S64995F37	220 ohm
●	R337	06S64995F37	220 ohm
△	R337	06S64995F37	220 ohm
○	R338	06S64995F37	220 ohm
●	R338	06S64995F37	220 ohm
△	R338	06S64995F37	220 ohm
○	R339	06S64995F65	3.3K ohm
●	R339	06S64995F71	5.6K ohm
○	R340	06S64995F65	3.3K ohm
●	R340	06S64995F71	5.6K ohm
○	R341	06S64995F29	100 ohm
●	R341	06S64995F29	100 ohm
△	R341	06S64995F29	100 ohm
○	R342	06S64995F29	100 ohm
●	R342	06S64995F29	100 ohm
△	R342	06S64995F29	100 ohm
○	R343	06S64995F85	22K ohm
●	R343	06S64995F89	33K ohm
△	R343	06S64995F85	22K ohm
○	R344	06S64995F85	22K ohm
●	R344	06S64995F89	33K ohm
△	R344	06S64995F85	22K ohm
○	R345	06S64995F37	220 ohm
●	R345	06S64995F37	220 ohm
△	R345	06S64995F37	220 ohm
○	R346	06S64995F37	220 ohm
●	R346	06S64995F37	220 ohm
△	R346	06S64995F37	220 ohm
○	R347	06S64995F65	3.3K ohm

	Symbol No.	Part No.	Description
●	R347	06S64995F65	3.3K ohm
○	R348	06S64995F65	3.3K ohm
●	R348	06S64995F65	3.3K ohm
	R349	06S64995F29	100 ohm
	R350	06S64995F29	100 ohm
○	R351	06S64995F85	22K ohm
●	R351	06S64995F89	33K ohm
△	R351	06S64995F85	22K ohm
□	R351	06S64995F85	22K ohm
○	R352	06S64995F85	22K ohm
●	R352	06S64995F89	33K ohm
△	R352	06S64995F85	22K ohm
□	R352	06S64995F85	22K ohm
△	R353	06S64995F53	1K ohm
△	R354	06S64995F53	1K ohm
△	R355	06S64995F53	1K ohm
□	R355	06S64995F61	2.2K ohm
△	R356	06S64995F53	1K ohm
□	R356	06S64995F61	2.2K ohm
○	R373	06S64995F77	10K ohm
△	R373	06S64995F77	10K ohm
□	R373	06S64995F77	10K ohm
	R501	06S64995F85	22K ohm
	R502	06S64995F77	10K ohm
	R503	06S64995F53	1K ohm
	R504	06S64995F53	1K ohm
	R505	06S64995F53	1K ohm
	R506	06S64995F53	1K ohm
	R507	06S64995F53	1K ohm
	R508	06S64995F53	1K ohm
	R509	06S64995F53	1K ohm
	R510	06S64995F53	1K ohm
	R511	06S64995F77	10K ohm
	R512	06S64995F61	2.2K ohm
	R513	06S64995F53	1K ohm
	R514	06S64995F85	22K ohm
	R515	06S64995F61	2.2K ohm
	R516	06S64995F61	2.2K ohm
	R517	06S64995F85	22K ohm
	R518	06S64995F85	22K ohm
	R519	06S64995F53	1K ohm
	R520	06S64995F53	1K ohm
	R521	06S64995F93	47K ohm
○	R523	06S64995F78	11K ohm
●	R523	06S64995F77	10K ohm
△	R523	06S64995F85	22K ohm
□	R523	06S64995F88	30K ohm

NOTE : ○ : For TDA-7556R Model Only, ● : For TDA-7659R Model Only, △ : For TDA-7552R Model Only, □ : For TDA-7550R Model Only, Others : Common.

Symbol No.	Part No.	Description
○ R524	06S64995F87	27K ohm
△ R524	06S64995F81	15K ohm
□ R524	06S64995F69	4.7K ohm
R525	06S64995F85	22K ohm
R526	06S64995F85	22K ohm
R528	06S64995F93	47K ohm
R530	06S64995F53	1K ohm
R532	06S64995F93	47K ohm
R533	06S64995F93	47K ohm
R534	06S64995F93	47K ohm
R535	06S64996F02	100K ohm
R538	06S64996F10	220K ohm
R539	06S64995F53	1K ohm
R540	06S64995F93	47K ohm
R541	06S64995F53	1K ohm
R543	06S64995F93	47K ohm
R544	06S64995F93	47K ohm
R545	06S64995F93	47K ohm
R546	06S64995F53	1K ohm
R547	06S64995F53	1K ohm
R548	06S64995F53	1K ohm
R550	06S64995F79	12K ohm
○ R551	06S64995F53	1K ohm
● R551	06S64995F53	1K ohm
○ R552	06S64995F93	47K ohm
● R552	06S64995F93	47K ohm
△ R552	06S64995F77	10K ohm
□ R552	06S64995F77	10K ohm
R556	06S70072F77	10K ohm 1/4W
R557	06S70072F59	1.8K ohm 1/4W
R558	06S70072F59	1.8K ohm 1/4W
R559	06S70072F59	1.8K ohm 1/4W
R560	06S70072F59	1.8K ohm 1/4W
R561	06S64996F02	100K ohm
R562	06S70072F53	1K ohm 1/4W
R564	06S70072F39	270 ohm 1/4W
R565	06S70072F39	270 ohm 1/4W
R566	06S64995F93	47K ohm
○ R567	06S64995F77	10K ohm
● R567	06S64995F77	10K ohm
● R568	06S53330F77	10K ohm 1/8W
● R569	06S70072F61	2.2K ohm 1/4W
R570	06S64996F02	100K ohm
□ R573	06S64995F37	220 ohm
□ R574	06S64995F37	220 ohm
R575	06S64995F53	1K ohm
R576	06S64995F53	1K ohm

Symbol No.	Part No.	Description
R577	06S64995F53	1K ohm
R578	06S64995F53	1K ohm
R579	06S64995F53	1K ohm
R580	06S64995F53	1K ohm
R581	06S64995F94	51K ohm
R582	06S64995F94	51K ohm
R583	06S64995F53	1K ohm
R584	06S64995F53	1K ohm
R585	06S64995F53	1K ohm
R587	06S64996F02	100K ohm
R588	06S64995F53	1K ohm
R589	06S64995F53	1K ohm
R590	06S64995F53	1K ohm
R591	06S64995F53	1K ohm
R592	06S64995F53	1K ohm
R593	06S64995F53	1K ohm
R594	06S64995F53	1K ohm
R595	06S64995F77	10K ohm
○ R596	06S64995F85	22K ohm
● R596	06S64995F85	22K ohm
○ R597	06S64995F85	22K ohm
● R597	06S64995F85	22K ohm
○ R598	06S64995F67	3.9K ohm
● R598	06S64995F67	3.9K ohm
○ R599	06S64995F67	3.9K ohm
● R599	06S64995F67	3.9K ohm
□ R600	06S64995F61	2.2K ohm
R802	06S64995F89	33K ohm
R803	06S64995F89	33K ohm
R804	06S64995F93	47K ohm
R805	06S64995F93	47K ohm
R806	06S64995F93	47K ohm
R807	06S64995F93	47K ohm
R808	06S64995F93	47K ohm
○ R811	06S64995F77	10K ohm
● R811	06S64995F77	10K ohm
△ R811	06S64995F77	10K ohm
○ R812	06S64995F53	1K ohm
● R812	06S64995F53	1K ohm
△ R812	06S64995F53	1K ohm
○ R813	06S64995F53	1K ohm
● R813	06S64995F53	1K ohm
△ R813	06S64995F53	1K ohm
R821	06S64995F85	22K ohm
R822	06S64995F69	4.7K ohm
R823	06S64995F61	2.2K ohm
R831	06S64995F77	10K ohm

NOTE : ○ : For TDA-7556R Model Only, ● : For TDA-7659R Model Only, △ : For TDA-7552R Model Only,
□ : For TDA-7550R Model Only, Others : Common.

	Symbol No.	Part No.	Description
	R834	06S70072F53	1K ohm 1/4W
	R835	06S70072F77	10K ohm 1/4W
○	R837	06S64995F77	10K ohm
△	R837	06S64995F77	10K ohm
□	R837	06S64995F77	10K ohm
○	R838	06S64995F81	15K ohm
△	R838	06S64995F81	15K ohm
□	R838	06S64995F81	15K ohm
○	R839	06S64995F37	220 ohm
△	R839	06S64995F37	220 ohm
□	R839	06S64995F37	220 ohm
	R851	06S64995F73	6.8K ohm
	R852	06S64995F77	10K ohm
	R853	06S64995F77	10K ohm
	R854	06S64995F69	4.7K ohm
	R855	06S64995F73	6.8K ohm
	R856	06S64995F77	10K ohm
	R857	06S64995F77	10K ohm
	R858	06S70072F19	39 ohm 1/4W
	R859	06S70072F19	39 ohm 1/4W
	R860	06S70072F19	39 ohm 1/4W
	R861	06S70072F19	39 ohm 1/4W
	R862	06S64995F61	2.2K ohm
	R863	06S64995F57	1.5K ohm
	R864	06S64995F57	1.5K ohm
	R865	06S64995F61	2.2K ohm
	R866	06S64995F55	1.2K ohm
	R867	06S70072F05	10 ohm 1/4W
	R871	06S70072F67	3.9K ohm 1/4W
	R872	06S53330F69	4.7K ohm 1/8W
	R873	06S53330F69	4.7K ohm 1/8W
	R881	06S53330F77	10K ohm 1/8W
	R883	06S70072F59	1.8K ohm 1/4W
	R884	06S64995F77	10K ohm
	R888	06S70072F89	9.1 ohm 1/4W
	R889	06S70072F89	9.1 ohm 1/4W
	R890	06S70072F89	9.1 ohm 1/4W
	R891	06S64995F77	10K ohm
	R892	06S64995F77	10K ohm
	R893	06S70072F61	2.2K ohm 1/4W
	R894	06S64995F77	10K ohm
	R895	06S70072F45	470 ohm 1/4W
○	R896	06S64995F55	1.2K ohm
●	R896	06S64995F55	1.2K ohm
△	R896	06S64995F55	1.2K ohm
	R897	06S70072F89	9.1 ohm 1/4W
	R899	06S70072F59	1.8K ohm 1/4W

	Symbol No.	Part No.	Description
	VR201	18T15356W13	Variable, 10K ohm
	VR202	18T15356W13	Variable, 10K ohm

Front P.C.Board

IC's

	IC401	51T85152W01	LC75883W
	IC402	51T55639W01	RS-31

Transistors

○	Q401	48T73888F12	CP., FMC2
●	Q401	48T73888F12	CP., FMC2
△	Q401	48T73888F12	CP., FMC2
○	Q402	48T63788F04	CP., 2SD1328
●	Q402	48T63788F04	CP., 2SD1328
△	Q402	48T63788F04	CP., 2SD1328
○	Q403	48T63788F04	CP., 2SD1328
●	Q403	48T63788F04	CP., 2SD1328
△	Q403	48T63788F04	CP., 2SD1328
○	Q404	48T63788F04	CP., 2SD1328
●	Q404	48T63788F04	CP., 2SD1328
△	Q404	48T63788F04	CP., 2SD1328
○	Q405	48T63788F04	CP., 2SD1328
●	Q405	48T63788F04	CP., 2SD1328
△	Q405	48T63788F04	CP., 2SD1328
○	Q406	48T63788F04	CP., 2SD1328
●	Q406	48T63788F04	CP., 2SD1328
△	Q406	48T63788F04	CP., 2SD1328
○	Q407	48T63788F04	CP., 2SD1328
●	Q407	48T63788F04	CP., 2SD1328
△	Q407	48T63788F04	CP., 2SD1328
	Q408	48T62967F03	CP., DTC124K
	Q409	48T62967F03	CP., DTC124K

Diodes

	D401	48T64134F01	CP., DA204K
	D402	48T64134F01	CP., DA204K
	D403	48T64134F01	CP., DA204K
	D404	48T64134F01	CP., DA204K
	D405	48T64134F01	CP., DA204K
	D406	48T81063F01	CP., MA159

NOTE : ○ : For TDA-7556R Model Only, ● : For TDA-7659R Model Only, △ : For TDA-7552R Model Only,
□ : For TDA-7550R Model Only, Others : Common.

	Symbol No.	Part No.	Description
	D407	48T81063F01	CP., MA159
	D408	48T63462F01	CP., DAN202K
○	D409	48T64134F01	CP., DA204K
●	D409	48T64134F01	CP., DA204K
△	D409	48T64134F01	CP., DA204K
	ZD401	48T84735F07	Zener, MA3056

LED's

	LD401	48T65477W05	CP., SLM-010DTT87 (ORG)
○	LD402	48T65477W05	CP., SLM-010DTT87 (ORG)
●	LD402	48T65477W05	CP., SLM-010DTT87 (ORG)
△	LD402	48T65477W05	CP., SLM-010DTT87 (ORG)
○	LD403	48T65477W05	CP., SLM-010DTT87 (ORG)
●	LD403	48T65477W05	CP., SLM-010DTT87 (ORG)
△	LD403	48T65477W05	CP., SLM-010DTT87 (ORG)
	LD404	48T65477W02	CP., SLM-010LTT87 (RED)
	LD405	48T65477W02	CP., SLM-010LTT87 (RED)
○	LD406	48T65477W05	CP., SLM-010DTT87 (ORG)
●	LD406	48T65477W05	CP., SLM-010DTT87 (ORG)
△	LD406	48T65477W05	CP., SLM-010DTT87 (ORG)
○	LD407	48T65477W05	CP., SLM-010DTT87 (ORG)
●	LD407	48T65477W05	CP., SLM-010DTT87 (ORG)
△	LD407	48T65477W05	CP., SLM-010DTT87 (ORG)
○	LD408	48T65477W05	CP., SLM-010DTT87 (ORG)
●	LD408	48T65477W05	CP., SLM-010DTT87 (ORG)
△	LD408	48T65477W05	CP., SLM-010DTT87 (ORG)

Switches

	S401	40T55656W03	Tact, CP. SKQMAJ (INTLZ/PWR)
	S403	40T75234W01	Tact, CP. SKQNAC (SOURCE/A.S.U.)
	S404	40T75234W01	Tact, CP. SKQNAC (EJECT)
	S405	40T55656W03	Tact, CP. SKQMAJ (REW/DN)
	S406	40T55656W03	Tact, CP. SKQMAJ (FF/UP)
	S407	40T75234W01	Tact, CP. SKQNAC (TUNE/A.MEMO)
	S408	40T55656W03	Tact, CP. SKQMAJ (BAND/PROG)
	S409	40T75234W01	Tact, CP. SKQNAC (TITLE)
	S410	40T75234W01	Tact, CP. SKQNAC (T.INFO)
○	S411	40T55656W03	Tact, CP. SKQMAJ (RDS/1/DOLBY • B/C)
●	S411	40T55656W03	Tact, CP. SKQMAJ (RDS/1/DOLBY • B/C)
△	S411	40T55656W03	Tact, CP. SKQMAJ (RDS/1/DOLBY • B/C)
□	S411	40T55656W03	Tact, CP. SKQMAJ (RDS/1/DOLBY)
	S412	40T55656W03	Tact, CP. SKQMAJ (PTY/2/P.S. DN)
	S413	40T55656W03	Tact, CP. SKQMAJ (P.PTY/3/P.S. UP)
	S414	40T55656W03	Tact, CP. SKQMAJ (M.I.X./4/B.SKIP)
	S415	40T55656W03	Tact, CP. SKQMAJ (RPT/5)
	S416	40T55656W03	Tact, CP. SKQMAJ (SCAN/6)
	S417	40T55656W03	Tact, CP. SKQMAJ (F/DEMO)

Lamps

○	PL401	65T75522W02	CP., 9V-85mA
●	PL401	65T75522W02	CP., 9V-85mA
△	PL401	65T75522W02	CP., 9V-85mA
○	PL402	65T75522W02	CP., 9V-85mA
●	PL402	65T75522W02	CP., 9V-85mA
△	PL402	65T75522W02	CP., 9V-85mA
○	PL403	65T75231W06	9V-85mA
●	PL403	65T75231W06	9V-85mA
△	PL403	65T75231W06	9V-85mA
□	PL403	65T75231W01	9V-85mA
○	PL404	65T75231W06	9V-85mA
●	PL404	65T75231W06	9V-85mA
△	PL404	65T75231W06	9V-85mA
□	PL404	65T75231W01	9V-85mA
	PL411	65T75233W01	CP., 6V-80mA
	PL412	65T75233W01	CP., 6V-80mA
○	PL413	65T75233W02	CP., 6V-80mA
●	PL413	65T75233W02	CP., 6V-80mA
△	PL413	65T75233W02	CP., 6V-80mA
○	PL414	65T75233W02	CP., 6V-80mA
●	PL414	65T75233W02	CP., 6V-80mA
△	PL414	65T75233W02	CP., 6V-80mA
○	PL415	65T75231W02	9V-85mA
●	PL415	65T75231W02	9V-85mA
△	PL415	65T75231W02	9V-85mA
	PL417	65T75232W01	CP., 6V-80mA
	PL418	65T75233W01	CP., 6V-80mA
	PL419	65T75233W01	CP., 6V-80mA

Capacitors

	C401	08S82122F59	CP., 820pF
	E401	23T25191W39	CP. ELY., 6.8μF / 6.3V
	C402	08T15399W03	CP., 0.047μF

NOTE : ○ : For TDA-7556R Model Only, ● : For TDA-7659R Model Only, △ : For TDA-7552R Model Only,
□ : For TDA-7550R Model Only, Others : Common.

Symbol No.	Part No.	Description
Resistors		(All resistors are chip 1/4W±5% unless otherwise noted.)
	R402	06S64995F77	10K ohm 1/10W
	R403	06S64995F77	10K ohm 1/10W
	R404	06S64995F69	4.7K ohm 1/10W
	R405	06S64995F77	10K ohm 1/10W
	R406	06S64995F53	1K ohm 1/10W
	R407	06S64995F53	1K ohm 1/10W
	R410	06S64995F53	1K ohm 1/10W
	R411	06S64995F53	1K ohm 1/10W
	R412	06S64995F53	1K ohm 1/10W
	R413	06S64995F53	1K ohm 1/10W
	R414	06S64995F53	1K ohm 1/10W
	R415	06S64995F69	4.7K ohm 1/10W
	R416	06S64995F97	68K ohm 1/10W
○	R422	06S64995F61	2.2K ohm 1/10W
●	R422	06S64995F61	2.2K ohm 1/10W
△	R422	06S64995F61	2.2K ohm 1/10W
○	R423	06S64995F61	2.2K ohm 1/10W
●	R423	06S64995F61	2.2K ohm 1/10W
△	R423	06S64995F61	2.2K ohm 1/10W
○	R424	06S64995F61	2.2K ohm 1/10W
●	R424	06S64995F61	2.2K ohm 1/10W
△	R424	06S64995F61	2.2K ohm 1/10W
○	R425	06S64995F61	2.2K ohm 1/10W
●	R425	06S64995F61	2.2K ohm 1/10W
△	R425	06S64995F61	2.2K ohm 1/10W
○	R426	06S64995F61	2.2K ohm 1/10W
●	R426	06S64995F61	2.2K ohm 1/10W
△	R426	06S64995F61	2.2K ohm 1/10W
○	R427	06S64995F61	2.2K ohm 1/10W
●	R427	06S64995F61	2.2K ohm 1/10W
△	R427	06S64995F61	2.2K ohm 1/10W
○	R428	06S64995F93	47K ohm 1/10W
●	R428	06S64995F93	47K ohm 1/10W
△	R428	06S64995F93	47K ohm 1/10W
	R429	06S64995F53	1K ohm 1/10W
	R430	06S64995F53	1K ohm 1/10W
○	R451	06S70072F09	15 ohm
●	R451	06S70072F09	15 ohm
△	R451	06S70072F09	15 ohm
○	R452	06S70072F09	15 ohm
●	R452	06S70072F09	15 ohm
△	R452	06S70072F09	15 ohm
	R453	06S70072F09	15 ohm
	R454	06S70072F09	15 ohm
	R455	06S70072F41	330 ohm

Symbol No.	Part No.	Description
	R456	06S70072F43	390 ohm
○	R457	06S70072F41	330 ohm
●	R457	06S70072F41	330 ohm
△	R457	06S70072F41	330 ohm
○	R458	06S70072F39	270 ohm
●	R458	06S70072F39	270 ohm
△	R458	06S70072F39	270 ohm
	R459	06S70072F13	22 ohm
	R460	06S70072F13	22 ohm
○	R461	06S70072F13	22 ohm
●	R461	06S70072F13	22 ohm
△	R461	06S70072F13	22 ohm
○	R462	06S70072F15	27 ohm
●	R462	06S70072F15	27 ohm
△	R462	06S70072F15	27 ohm
○	R463	06S70072F16	30 ohm
●	R463	06S70072F16	30 ohm
△	R463	06S70072F16	30 ohm
○	R464	06S70072F16	30 ohm
●	R464	06S70072F16	30 ohm
△	R464	06S70072F16	30 ohm
	R465	06S70072F16	30 ohm
	R466	06S70072F16	30 ohm
	R467	06S70072F15	27 ohm
	R468	06S70072F15	27 ohm
	R469	06S70072F14	24 ohm
	R470	06S70072F14	24 ohm
	R471	06S70072F13	22 ohm
	R472	06S70072F41	330 ohm
	R473	06S70072F67	3.9K ohm
○	R474	06S70072F37	220 ohm
●	R474	06S70072F37	220 ohm
△	R474	06S70072F37	220 ohm
○	R475	06S70072F39	270 ohm
●	R475	06S70072F39	270 ohm
△	R475	06S70072F39	270 ohm
○	R476	06S70072F16	30 ohm
●	R476	06S70072F16	30 ohm
△	R476	06S70072F16	30 ohm
○	R477	06S70072F16	30 ohm
●	R477	06S70072F16	30 ohm
△	R477	06S70072F16	30 ohm
○	R478	06S70072F17	33 ohm
●	R478	06S70072F17	33 ohm
△	R478	06S70072F17	33 ohm
	R479	06S70072F39	270 ohm
	R481	06S64995F46	510 ohm 1/10W

NOTE : ○ : For TDA-7556R Model Only, ● : For TDA-7659R Model Only, △ : For TDA-7552R Model Only,
□ : For TDA-7550R Model Only, Others : Common.

Symbol No.	Part No.	Description
○ R482	06S64995F53	1K ohm 1/10W
● R482	06S64995F53	1K ohm 1/10W
△ R482	06S64995F53	1K ohm 1/10W

GR Control P.C.Board (●)

IC's

IC3102	51T75010W01	BA3703F
IC3501	51T75628W01	BA6285FP

Transistors

Q3501	48T84366F05	2SB1243
Q3502	48T62967F06	CP., DTC114YK
Q3503	48T62967F06	CP., DTC114YK
Q3504	48T83835F03	2SD1859
Q3505	48T62967F06	CP., DTC114YK

Diodes

D3501	48T81063F01	CP., MA159
D3502	48T81063F01	CP., MA159
ZD3501	48T83128F11	Zener, HZS7A2L

Capacitors

E3107	23S75372W15	ELY., 1μF / 50V
E3108	23S75372W04	ELY., 10μF / 16V
C3111	08S65128F35	CP., 100pF
C3112	08S35374W01	CP., 0.1μF
C3113	08S82122F59	CP., 820pF
C3501	08S65128F76	CP., 0.1μF
E3501	23S75372W08	ELY., 100μF / 16V

Resistors

(All resistors are chip 1/10W±5% unless otherwise noted.)

R3114	06S64995F85	22K ohm
R3115	06S64995F85	22K ohm
R3116	06S64995F85	22K ohm
R3117	06S64996F01	91K ohm
R3118	06S64995F95	56K ohm
R3119	06S64995F32	130 ohm
R3507	06S70072F41	330 ohm 1/4W
R3508	06S70072F41	330 ohm 1/4W
R3509	06S64995F77	10K ohm
R3510	06S70072F60	2K ohm 1/4W
R3511	06S70072F60	2K ohm 1/4W
R3512	06S53331F01	91K ohm 1/8W
R3513	06S53331F01	91K ohm 1/8W
R3514	06S70072F53	1K ohm 1/4W
R3515	06S81094F05	M.F., 3.3 ohm 1/2W

GR Control P.C.Board (○△□)

IC's

IC1101	51T64606F02	TA7705F
IC1102	51T75010W01	BA3703F
IC1501	51T75628W01	BA6285FP

Transistors

Q1501	48T84366F05	2SB1243
Q1502	48T62967F06	CP., DTC114YK
Q1503	48T62967F06	CP., DTC114YK
Q1504	48T83835F03	2SD1859

Diodes

D1101	48T81063F01	CP., MA159
D1501	48T81063F01	CP., MA159
D1502	48T81063F01	CP., MA159
ZD1501	48T83128F11	Zener, HZS7A2L

Capacitors

E1101	23S75372W02	ELY., 100μF / 10V
E1102	23S75372W04	ELY., 10μF / 16V
E1103	23S75372W02	ELY., 100μF / 10V
E1104	23S75372W07	ELY., 47μF / 16V
C1105	08S72783F31	CP., 470pF
E1105	23S75372W09	ELY., 4.7μF / 35V
C1106	08S72783F31	CP., 470pF
E1106	23S75372W09	ELY., 4.7μF / 35V
C1107	08S72783F31	CP., 470pF
E1107	23S75372W15	ELY., 1μF / 50V
C1108	08S72783F31	CP., 470pF
E1108	23S75372W04	ELY., 10μF / 16V
C1109	08S53332F48	CP., 0.012μF
C1110	08S53332F48	CP., 0.012μF
C1111	08S65128F35	CP., 100pF
C1112	08S35374W01	CP., 0.1μF

NOTE : ○ : For TDA-7556R Model Only, ● : For TDA-7659R Model Only, △ : For TDA-7552R Model Only,
□ : For TDA-7550R Model Only, Others : Common.

Symbol No.	Part No.	Description
C1113	08S82122F59	CP., 820pF
C1501	08S65128F76	CP., 0.1µF
E1501	23S75372W08	ELY., 100µF / 16V

Resistors (All resistors are chip 1/10W±5% unless otherwise noted.)

Symbol No.	Part No.	Description
R1101	06S53330F32	130 ohm 1/8W
R1102	06S64996F15	360K ohm
R1103	06S64995F80	13K ohm
R1104	06S53330F80	13K ohm 1/8W
R1105	06S53330F32	130 ohm 1/8W
R1106	06S64995F80	13K ohm
R1107	06S64995F80	13K ohm
R1108	06S64996F15	360K ohm
R1109	06S53330F29	100 ohm 1/8W
R1110	06S53330F65	3.3K ohm 1/8W
R1111	06S53330F65	3.3K ohm 1/8W
R1112	06S53330F85	22K ohm 1/8W
R1113	06S53330F85	22K ohm 1/8W
R1116	06S64995F85	22K ohm
R1117	06S64996F01	91K ohm
R1118	06S64995F95	56K ohm
R1119	06S64995F32	130 ohm
R1507	06S70072F41	330 ohm 1/4W
R1508	06S70072F41	330 ohm 1/4W
R1509	06S64995F77	10K ohm
R1510	06S70072F60	2K ohm 1/4W
R1511	06S70072F60	2K ohm 1/4W
R1512	06S53331F01	91K ohm 1/8W
R1513	06S53331F01	91K ohm 1/8W
R1514	06S70072F53	1K ohm 1/4W
R1515	06S81094F09	M.F., 4.7 ohm 1/2W

GR Audio P.C.Board (●)

IC

Symbol No.	Part No.	Description
IC3101	51T64606F02	TA7705F

Diode

Symbol No.	Part No.	Description
D3101	48T81063F01	CP., MA159

Capacitors

Symbol No.	Part No.	Description
C3101	08T35389W09	PF., 470pF
E3101	23S75372W02	ELY., 100µF / 10V
C3102	08T35389W09	PF., 470pF
E3102	23S75372W04	ELY., 10µF / 16V
C3103	08T35389W09	PF., 470pF
E3103	23S75372W02	ELY., 100µF / 10V
C3104	08T35389W09	PF., 470pF
E3104	23S75372W07	ELY., 47µF / 16V
E3105	23S75372W09	ELY., 4.7µF / 35V
E3106	23S75372W09	ELY., 4.7µF / 35V
C3109	08T35122W02	PF., 0.012µF
C3110	08T35122W02	PF., 0.012µF

Resistors (All resistors are chip1/8W±5% unless otherwise noted.)

Symbol No.	Part No.	Description
R3101	06S53330F32	130 ohm
R3102	06S64996F12	270K ohm 1/10W
R3103	06S64995F79	12K ohm 1/10W
R3104	06S64995F80	13K ohm 1/10W
R3105	06S53330F32	130 ohm
R3106	06S64995F80	13K ohm 1/10W
R3107	06S64995F79	12K ohm 1/10W
R3108	06S64996F12	270K ohm 1/10W
R3109	06S53330F29	100 ohm
R3110	06S53330F65	3.3K ohm
R3111	06S53330F65	3.3K ohm
R3112	06S53330F85	22K ohm
R3113	06S53330F85	22K ohm

Miscellaneous

	Symbol No.	Part No.	Description
	CB501	09T75038W16	16P Connector
	CH401	09T75039W16	16P Connector
	ET001	09T55211W01	Antenna Receptacle
○	ET502	01T85236W01	Assy., RCA Connector (REAR OUT/FRONT OUT/SUB-W/Audio Interrupt In/Remote Turn-On)
●	ET502	01T85236W01	Assy., RCA Connector (REAR OUT/FRONT OUT/SUB-W/Audio Interrupt In/Remote Turn-On)
△	ET502	01T85236W02	Assy., RCA Connector (REAR OUT/F-OUT/NFP/Remote Turn-On)

NOTE : ○ : For TDA-7556R Model Only, ● : For TDA-7659R Model Only, △ : For TDA-7552R Model Only, □ : For TDA-7550R Model Only, Others : Common.

Symbol No.	Part No.	Description
□ ET502	01T85236W03	Assy., RCA Connector (REAR OUT/Remote Turn-On)
○ ET504	01T75292W04	Assy., ISO Connector (15A)
● ET504	01T75292W03	Assy., ISO Connector (7.5A)
△ ET504	01T75292W04	Assy., ISO Connector (15A)
□ ET504	01T75292W04	Assy., ISO Connector (15A)
○ HD1101	88T75612W02	Head
● HD1101	88T85509W01	Head
△ HD1101	88T75612W02	Head
□ HD1101	88T75612W02	Head
JK503	09T55071W11	Ai-NET Connector
○ LCD401	65T85084W01	LCD Display
● LCD401	65T85254W01	LCD Display
△ LCD401	65T85084W02	LCD Display
□ LCD401	65T85084W03	LCD Display
○ M1501	01V74500W16	Assy., Main Motor (13.2V-55mA)
● M1501	01V84200W63	Assy., Main Motor (6V-90mA)
△ M1501	01V74500W16	Assy., Main Motor (13.2V-55mA)
□ M1501	01V74500W16	Assy., Main Motor (13.2V-55mA)
M1502	01V74500W23	Assy., Sub Motor (7V-370mA)
PT1501	51T63433F03	Sensor, Photo ON2170-R2
PT1502	51T63433F03	Sensor, Photo ON2170-R2
S1501	40T15222W01	Switch, Detector (PACK IN)
S1502	40T15382W02	Switch, Detector (PAUSE)
S1503	40T15382W02	Switch, Detector (MODE)
S1504	40T15382W02	Switch, Detector (METAL)
VR402 S402	40T45670W05	Rotary Encoder Volume (AUDIO CONTROL/MODE • LOUD)

Symbol No.	Part No.	Description

NOTE : ○ : For TDA-7556R Model Only, ● : For TDA-7659R Model Only, △ : For TDA-7552R Model Only,
□ : For TDA-7550R Model Only, Others : Common.

MEMO

Exploded View (Cabinet)

NOTE: The screws marked "✱1~4" are disassembly parts.

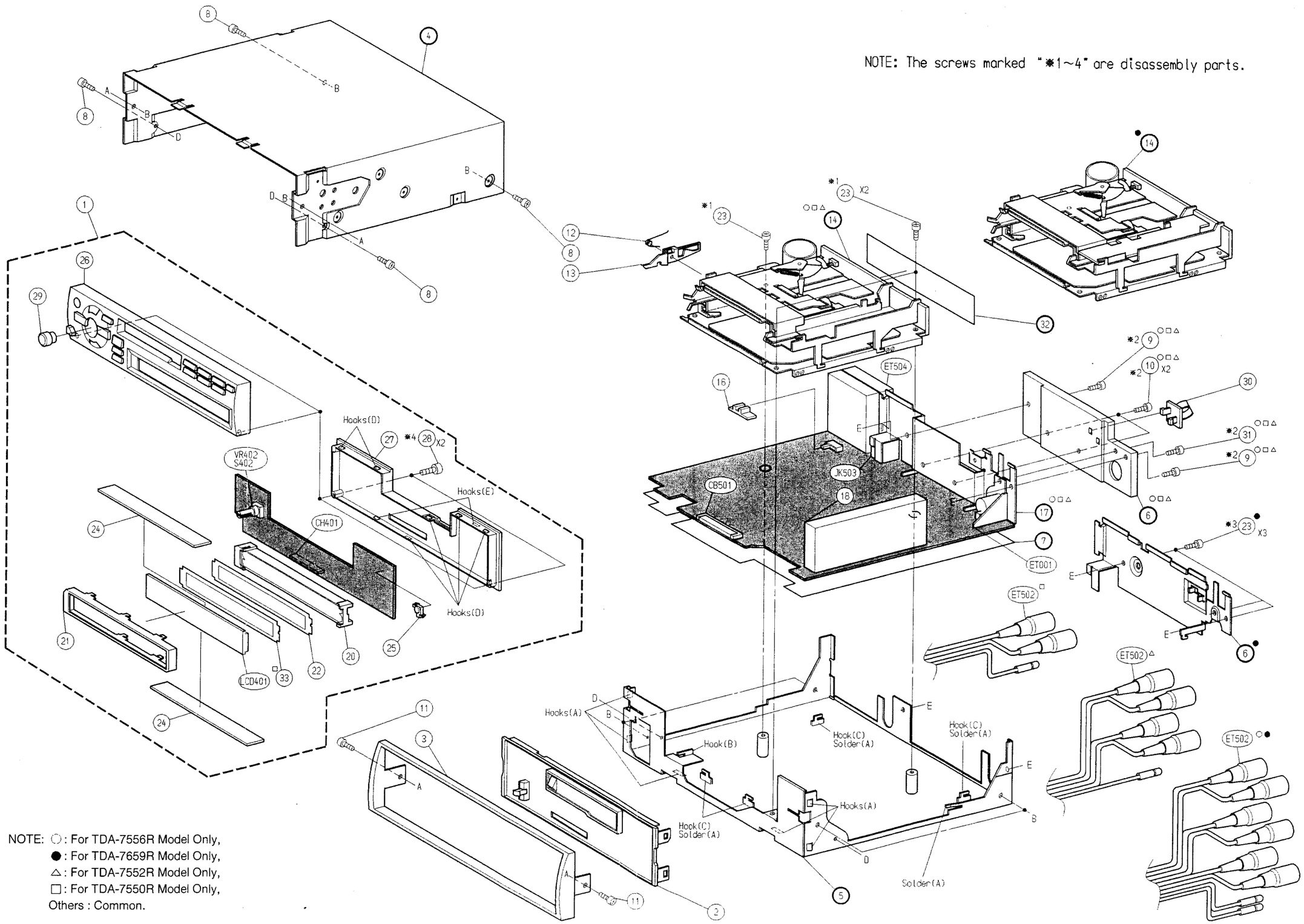

NOTE: ○: For TDA-7556R Model Only,
●: For TDA-7659R Model Only,
△: For TDA-7552R Model Only,
□: For TDA-7550R Model Only,
Others : Common.

Cabinet Assembly Parts List

NOTE:No parts number on parts list are not supplied.

Symbol No.		Index	Part No.	Description
○	1	2-A	01V83100W28	Assy., Nose Unit
●	1	2-A	01V83100W66	Assy., Nose Unit
△	1	2-A	01V83100W57	Assy., Nose Unit
□	1	2-A	01V83100W61	Assy., Nose Unit
○	2	5-E	13C70374W04	Assy., Front Escutcheon
●	2	5-E	13C70374W05	Assy., Front Escutcheon
△	2	5-E	13C70374W04	Assy., Front Escutcheon
□	2	5-E	13C70374W04	Assy., Front Escutcheon
	3	5-C	33C00544K01	Assy., Face Plate
	or	5-C	33C81778W01	Assy., Face Plate
	8		03S38013W24	Screw, Pan (M2.6X6)
○	9	3-G	03S44205G33	Screw, Pan (M2.6X8)
△	9	3-G	03S44205G33	Screw, Pan (M2.6X8)
□	9	3-G	03S44205G33	Screw, Pan (M2.6X8)
○	10	3-G	03S38013W02	Screw, Pan (M2.6X14)
△	10	3-G	03S38013W02	Screw, Pan (M2.6X14)
□	10	3-G	03S38013W02	Screw, Pan (M2.6X14)
	11		03S38013W13	Screw, Bind (M2.6X6)
	12	2-D	41A20424W01	Spring, Door
	13	2-D	45C61079W01	Lever, Door
	16	3-E	36A70327W01	Knob, Slide
	18	3-E	77B60578W01	FM/MW/LW Tuner Unit, MB4R3010 (FE001)
	20	4-C	15C00540K01	Assy., Case, LCD
	21	4-A	15B00536K01	Cover, LCD
○	22	4-C	26A80519W03	Reflector, Sheet
●	22	4-C	26A80519W03	Reflector, Sheet
△	22	4-C	26A80519W03	Reflector, Sheet
□	22	4-C	26A80519W01	Reflector, Sheet
○	23		03S44205G29	Screw, Pan (M2.6X6)
●	23		03S44205G07	Screw, Pan (M2.6X5)
△	23		03S44205G29	Screw, Pan (M2.6X6)
□	23		03S44205G29	Screw, Pan (M2.6X6)
	24		75T85247W01	Rubber, Electric
	25	4-C	15A80548W01	Cover, LED
○	26	2-A	13D80502W01	Assy., Nosepiece
●	26	2-A	13D80502W09	Assy., Nosepiece
△	26	2-A	13D80502W07	Assy., Nosepiece
□	26	2-A	13D80502W08	Assy., Nosepiece
	27	3-C	13D80516W01	Nose, Bottom
	28	3-C	03S71677F56	Screw, Pan (M1.7X12)
	29	2-A	36B80547W01	Knob, Rotary (VOLUME)
	30	3-G	15A70387W01	Holder, Antenna
○	31	3-G	03S44205G61	Screw, Pan (M2.6X10)
△	31	3-G	03S44205G61	Screw, Pan (M2.6X10)
□	31	3-G	03S44205G61	Screw, Pan (M2.6X10)
□	33	4-B	26A80519W02	Reflector, Sheet

NOTE : ○ : For TDA-7556R Model Only, ● : For TDA-7659R Model Only, △ : For TDA-7552R Model Only,
□ : For TDA-7550R Model Only, Others : Common.

Disassembly Instructions

1. Removal of Nose Unit

(1) Refer to the Owner's Manual (Part No. 68P81402W53).

2. Removal of Front Escutcheon

(1) After removal of Face Plate and Top Cover, remove the Hooks (A). .....Hooks (A) (4-D, 5-E)

3. Removal of Cassette Deck

(1) After removal of Front Escutcheon, remove three screws No.23. .....Screws No. 23 (※1) (2-E)
(2) Remove the Hook (B). .....Hook (B) (5-E)
(3) Disconnect the connector from Main P.C. Board.

4. Removal of Main P.C. Board (TDA-7556R/7552R/7550R Model Only)

(1) After removal of Cassette Deck, remove five screws No. 9, 10, 31, and remove the Heat Sink. .....Screws No. 9, 10, 31 (※2) (3-G)
(2) Remove the Solder (A) and Hooks (C). .....Solder (A) (5-E, 5-F)
Hooks (C) (5-E, 5-F)
(3) Main P.C. Board with Bracket IC can be removed completely.

5. Removal of Main P.C. Board (TDA-7659R Model Only)

(1) After removal of Cassette Deck, remove three screws No. 23. .....Screws No. 23 (※3) (3-G)
(2) Remove the Solder (A) and Hooks (C). .....Solder (A) (5-E, 5-F)
Hooks (C) (5-E, 5-F)
(3) Main P.C. Board with Bracket Rear can be removed completely.

6. Removal of Front P.C. Board

(1) After removal of Nose Unit, remove the Rotary Knob and two screws No. 28. .....Screws No. 28 (※4) (3-C)
(2) Remove the Hooks (D), and remove the Nosepiece. .....Hooks (D) (3-C, 4-C)
(3) Remove the Hooks (E). .....Hooks (E) (3-C)

NOTE: For the screws No., Hooks, and Solder, refer to the Exploded View (Cabinet).

TDA-7556R/7659R/
TDA-7552R/7550R

Semi - Conductor Lead Identifications

NOTE : For the parts not mentioned, refer to the Schematic Diagram.

85151W08 : IC501

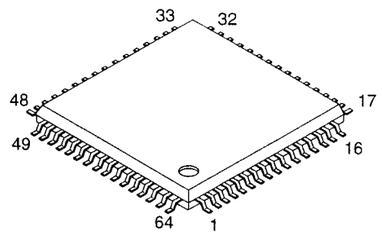

PIN NO.	CODE ADDRESS		I/O	PIN NO.	CODE ADDRESS	I/O	PIN NO.	CODE ADDRESS	I/O
1	○●	NFP EV DATA	O	20	PACK IN	I	43	GND	—
	△□	NC	—	21	REV. DET	I	44	NC	—
2	NOSE PWR		O	22	MODE SW	I	45	GND	—
3	○●△	BUZZER	O	23	FOR DET	I	46	GND	—
	□	NC	—	24	GND	—	47	Ai-NET IN/OUT	I
4	DTS START		O	25	PAUSE SW	I	48	○●	$\overline{\text{IN INT}}$ I
5	$\overline{\text{DTS MUTE}}$		I	26	MUTE	O		△□	PULL-DOWN —
6	DTS CE		O	27	NFP-1	O	49	MODEL	I
7	ALARM		O	28	NFP-2	O	50	ENCODER 1	I
8	○●	NFP EV CE	O	29	EV-DATA	I/O	51	ENCODER 2	I
	△□	NC	—	30	EV-CLK	O	52	GND	—
9	GND		—	31	PWR IC	O	53	GND	—
10	$\overline{\text{DOLBY B}}$		O	32	PWR ON	O	54	NOSE-DET	I
11	○●△	$\overline{\text{DOLBY C}}$	O	33	NC	—	55	V_{DD}	—
	□	NC	—	34	BUS OUT	O	56	V_{DD}	—
12	L.O. FAST		O	35	$\overline{\text{RESET}}$	I	57	LCD DO	I
13	FOR/$\overline{\text{REV}}$		O	36	REMOCON	I	58	LCD DI	O
14	O. MOTOR		O	37	BUS IN	I	59	LCD CLK	O
15	R-IN		O	38	ACC DET	I	60	LCD CE	O
16	F-IN		O	39	BAT DET	I	61	LCD RST	O
17	MTR FAST		I	40	V_{DD}	—	62	DTS STS	I
18	M.S. DET		I	41	X2	O	63	DTS CMD	O
19	METAL		I	42	X1	I	64	$\overline{\text{DTS CLK}}$	O

85088W01 : IC502

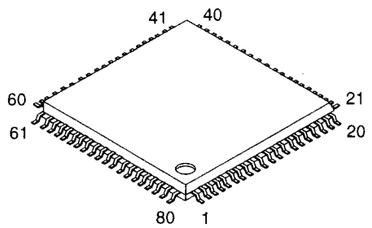

PIN NO.	CODE ADDRESS	I/O	PIN NO.	CODE ADDRESS	I/O	PIN NO.	CODE ADDRESS	I/O	PIN NO.	CODE ADDRESS	I/O
1	LW	O	21	NC	—	41	NC	—	61	RDS CLK	I
2	LO/$\overline{\text{DX}}$	O	22	NC	—	42	NC	—	62	RDS DATA	I
3	MONO	O	23	NC	—	43	NC	—	63	DTS CE	I
4	AV_{SS}	—	24	NC	—	44	NC	—	64	NC	—
5	$\overline{\text{LPF SW}}$	O	25	NC	—	45	NC	—	65	NC	—
6	IF MUTE	O	26	NC	—	46	NC	—	66	NC	—
7	$AV_{REF}1$	—	27	NC	—	47	NC	—	67	50K REF	O
8	RXD	I	28	NC	—	48	NC	—	68	V_{DD}	—
9	TXD	O	29	NC	—	49	NC	—	69	X2	—
10	SYNC	O	30	NC	—	50	NC	—	70	X1	—
11	PLL CLK	O	31	NC	—	51	NC	—	71	GND	—
12	PLL DATA	O	32	NC	—	52	NC	—	72	NC	—
13	PLL CE	O	33	GND	—	53	NC	—	73	PLL DATA I	I
14	DTS MUTE	O	34	NC	—	54	NC	—	74	AV_{DD}	—
15	DTS START	I	35	NC	—	55	NC	—	75	$AV_{REF}0$	I
16	DTS CMD	I	36	NC	—	56	NC	—	76	S.METER	I
17	DTS STS	O	37	NC	—	57	NC	—	77	A/I	I
18	DTS CLK	I	38	NC	—	58	FM/$\overline{\text{AM}}$	O	78	M.P	I
19	NC	—	39	NC	—	59	AUDIO IN	I	79	ST	I
20	NC	—	40	NC	—	60	RESET	I	80	SD	I

NOTE: ○: For TDA-7556R Model Only, ●: For TDA-7659R Model Only, △: For TDA-7552R Model Only,
□: For TDA-7550R Model Only, Others : Common.

MEMO

ALPINE®

ALPI-00366

SERVICE MANUAL

FM/MW/LW/RDS Cassette Receiver

CD Shuttle Controller

- For the cassette deck mechanism parts (GR75H110/120) of this model, refer to the Service Manual • GR/GR-Y Series (68P20504W07).

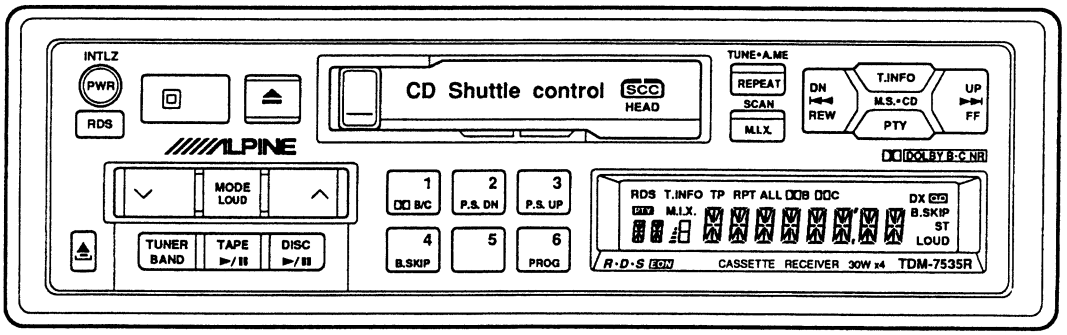

366

TDM-7531R/TDM-7532R TDM-7535R

Contents

Specifications ..... 3 to 4
In Case of Difficulty ..... 4 to 5
Connections ..... 5 to 6
Basic Operation 7
Radio Operation ..... 8 to 9
Cassette Player Operation ..... 9 to 10
CD Shuttle Operation 11
RDS (Radio Data System) ..... 12 to 14
Disassembly Instructions 15
Adjustment Procedures ..... 16 to 18
Adjustment Locations 19
Description of IC Terminal ..... 20 to 22
LCD Display 23
Block Diagram 24
Tuner Schematic Diagram 25
Parts Layout on P.C. Boards and Wiring Diagram (1/2) ..... 27 to 29
Parts Layout on P.C. Boards and Wiring Diagram (2/2) ..... 30 to 32
Schematic Diagram (1/3) ..... 33 to 35
Schematic Diagram (2/3) ..... 36 to 38
Schematic Diagram (3/3) ..... 39 to 41
Electrical Parts List ..... 42 to 50
Exploded View (Cabinet) ..... 51 to 52
Cabinet Assembly Parts List 53
Packing Assembly Parts List 54
Packing Method View 54
Semi-Conductor Lead Identifications 55

Spare Schematic Diagram Inserted.

Specifications

FM RADIO

Intermediate Frequency	10.7±0.1MHz
Frequency Range	87.5~108MHz
Usable Sensitivity (Mono, 30dB S/N, at 98.1MHz)	17.2dBf
-3dB Limiting Sensitivity (at 98.1MHz)	19.2dBf
S/N Ratio (Stereo, at 98.1MHz)	56dB
Image Rejection (at 106.1MHz)	40dB
IF Rejection (at 90.1MHz)	60dB
Distortion (Input 60dB μ, at 98.1MHz)	1%
Frequency Response (Ref. 400Hz, at 98.1MHz)	100Hz : 0±3dB 10kHz : -12±3dB
Stereo Separation (1kHz, at 98.1MHz)	20dB
PS Sensitivity (at 98.1MHz)	36.2dBf
TP Sensitivity (at 98.1MHz)	36.2dBf

MW RADIO

Intermediate Frequency	450kHz
Frequency Range	531~1,602kHz
Usable Sensitivity (20dB S/N, at 999kHz)	35dB
S/N Ratio (at 999kHz)	44dB
Image Rejection (at 1,404kHz)	50dB
IF Rejection (at 603kHz)	60dB
Distortion (at 999kHz)	1.5%
Frequency Response (Ref. 400Hz, at 999kHz)	100Hz : -3±4dB 4kHz : -12+6, -12dB

LW RADIO

Intermediate Frequency	450kHz
Frequency Range	153~281kHz
Usable Sensitivity (20dB S/N, at 216kHz)	41dB
S/N Ratio (at 216kHz)	42dB
Image Rejection (at 270kHz)	40dB
IF Rejection (at 162kHz)	50dB
Distortion (at 216kHz)	1.5%
Frequency Response (Ref. 400Hz, at 216kHz)	100Hz : -3±4dB 4kHz : -12+6, -12dB

TAPE PLAYER

Wow & Flutter (JIS, WRMS/MTT-111N)	0.2%
Tape Speed (MTT-111N)	4.76cm/sec.+3 to -1%
S/N Ratio (MTT-212N)	Dolby OFF : 52dB DOLBY B NR : 60.5dB (□, △) DOLBY C NR : 67dB (△)
Distortion (MTT-118N)	2%

Frequency Response (Ref. 1kHz, -3dB, MTT-256) ..... 250Hz～10kHz
Separation (MTT-141N) 35dB
Crosstalk (MTT-121N) 45dB

GENERAL

Power Supply DC14.4V
Power Output/Impedance ..... 11W/ch/4ohm (○, □)
14W/ch/4ohm (△)
Semiconductors ..... 20IC's, 40Transistors, 27Diodes, 6Zener Diodes (○)
22IC's, 41Transistors, 27Diodes, 6Zener Diodes (□)
22IC's, 51Transistors, 27Diodes, 7Zener Diodes (△)
Dimensions (W×H×D) ..... Chassis : 178×50×155mm
Nose : 169×45×22mm
Weight 1.5kg

Note : Due to Continuing product improvement, specifications and designs are subject to change without notice.
○ : For TDM-7531R Model Only, □ : For TDM-7532R Model Only,
△ : For TDM-7535R Model Only, Others :Common.

In Case of Difficulty

English

	If you encounter a problem, please review the items in the following checklist. This guide will help you isolate the problem if the unit is at fault. Otherwise, make sure the rest of your system is properly connected or consult your authorized Alpine dealer.

	Initial Turn-on After Installation
Symptom/Symptôme/Síntoma	**Cause and Solution**
No function or display./Fonctions inopérantes ou pas d'affichage./La unidad no funciona ni hay visualización.	• Car's ignition is off. – If connected following instructions, the unit will not operate with the car's ignition off.
	• Improper power lead connections. – Check power lead connections.
	• Blown fuse. – Check the fuse on the rear panel of the unit; replace with the proper value if necessary.

In Case of Difficulty

English

	Radio Mode
Symptom/Symptôme/Síntoma	**Cause and Solution**
Unable to receive stations./Impossible de recevoir les stations./Es imposible recibir emisoras.	• No antenna or open connection in cable. – Make sure the antenna is properly connected; replace the antenna or cable if necessary.
Unable to tune stations in the seek mode./ Impossible d'accorder les stations en mode de recherche automatique./Es imposible sintonizar emisoras en el modo de búsqueda.	• You are in a weak signal area. – Make sure the tuner is in the DX mode. • If the area you are in is a primary signal area, the antenna may not be grounded and connected properly. – Check your antenna connections; make sure the antenna is properly grounded at its mounting location. • The antenna may not be the proper length. – Make sure the antenna is fully extended; if broken, replace the antenna with a new one.
Broadcast is noisy./Réception parasitée./La recepción es ruidosa.	• The antenna is not the proper length. – Extend the antenna fully; replace it if it is broken. • The antenna is poorly grounded. – Make sure the antenna is grounded properly at its mounting location.

	Tape Mode
Output sounds dull./Sortie de son atténuée./ El sonido se oye inestable.	• The tape head needs cleaning. – Clean the tape head. • Incorrect Dolby NR in use. – Check Dolby NR switch setting.

In Case of Difficulty

English

	CD Shuttle Mode
Symptom/Symptôme/Sintoma	**Cause and Solution**
CD Shuttle not functioning./Le changeur CD ne fonctionne pas./El cambiador de discos compactos no funciona.	• Out of operating temperature range +50°C (+120°F) for CD. – Allow the car's interior (or trunk) temperature to cool.
CD playback sound is wavering./Le son de lecture de CD est déformé./El sonido de reproducción de un disco compacto oscila.	• Moisture condensation in the CD Module. – Allow enough time for the condensation to evaporate (about 1 hour).
Unable to fast forward or backward./Avance rapide ou inversion impossibles./El disco no avanza ni retrocede.	• The CD has been damaged. – Eject the CD and discard it; using a damaged CD in your unit can cause damage to the mechanism.
Sound skips due to vibration./Pertes de son dues à des vibrations./El sonido salta debido a las vibraciones.	• Improper mounting of the CD Shuttle. – Securely re-mount the CD Shuttle. • Disc is very dirty. – Clean the disc. • Disc has scratches. – Change the disc.
Sound skips without vibration./Pertes de son non dues à des vibrations./El sonido salta sin haber vibraciones.	• Dirty or scratched disc. – Clean the disc; damaged discs should be replaced.
Single (8 cm) disc does not play./Impossible de reproduire un CD de 8 cm./No es posible reproducir un disco sencillo (8 cm).	• Single CD adaptor is not used. – Attach a single CD adaptor (recommended by Alpine) to the single disc and insert into the CD magazine.

English

	Indication for CD Shuttle
Indication/Indication/Indicación	**Cause and Solution**
- - - H	• Protective circuit is activated due to high temperature. – The indicator will disappear when the temperature returns to within operation range.
ERROR-01	• Malfunction in the CD Shuttle. – Consult your Alpine dealer. Press the magazine eject button and pull out the magazine. Check the indication. Insert the magazine again. If the magazine cannot be pulled out, consult your Alpine dealer.
	• Magazine ejection not possible. – Press the magazine eject button. If the magazine does not eject, consult your Alpine dealer.
ERROR-02	• A disc is left inside the CD Shuttle. – Press the EJECT button to activate the eject function. When the CD Shuttle finishes the eject function, insert an empty CD magazine into the CD Shuttle to receive the disc left inside the CD Shuttle.
NO MAGZN	• No magazine is loaded into the CD Shuttle. – Insert a magazine.
NO DISC	• No indicated disc. – Choose another disc.

Connections/Anschlüsse/Connexions/Collegamenti/Conexiones/Anslutningar

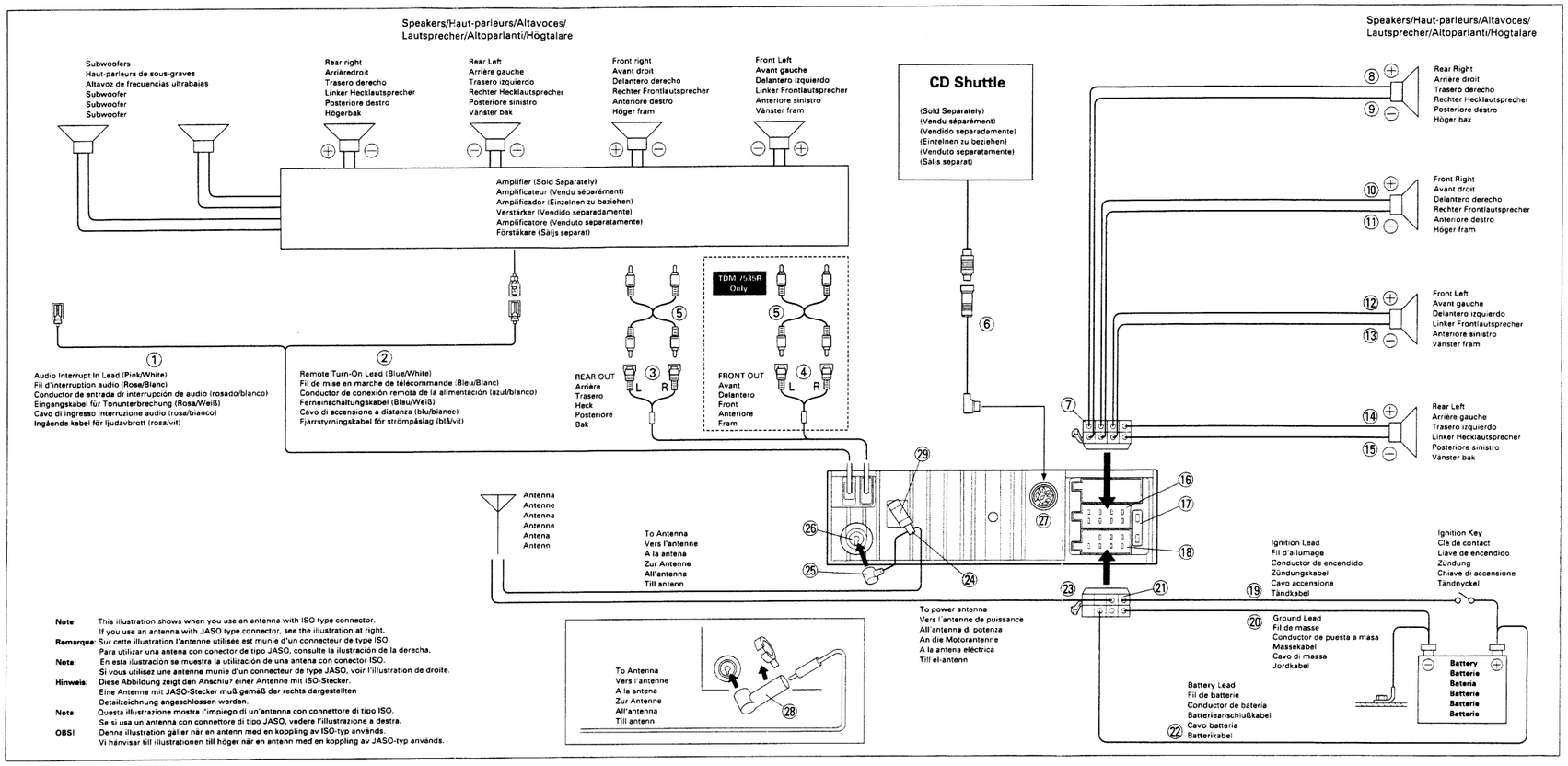

① **Audio Interrupt In Lead (Pink/White) (TDM-7535R only)**
② **Remote Turn-On Lead (Blue/White)**
Connect this lead to the remote turn-on lead of your amplifier or signal processor.
③ **Rear Output RCA Connectors**
RED is right and WHITE is left.
④ **Front Output RCA Connectors (TDM-7535R only)**
RED is right and WHITE is left.
⑤ **RCA Extension Cable (Sold Separately)**
⑥ **DIN Extension Cable (Sold Separately)**
NOTE:
If the DIN Extension cable supplied with the CD Shuttle does not have an "L" shaped connector, connection may be hindered at certain installation locations. In this case, purchase a 4910₀₂ Adaptor (sold separately).
⑦ **ISO Connector (Speaker Output, Female)**
⑧ **Right Rear (+) Speaker Output Lead (Violet)**
⑨ **Right Rear (–) Speaker Output Lead (Violet/Black)**
⑩ **Right Front (+) Speaker Output Lead (Grey)**
⑪ **Right Front (–) Speaker Output Lead (Grey/Black)**
⑫ **Left Front (+) Speaker Output Lead (White)**
⑬ **Left Front (–) Speaker Output Lead (White/Black)**
⑭ **Left Rear (+) Speaker Output Lead (Green)**
⑮ **Left Rear (–) Speaker Output Lead (Green/Black)**
⑯ **ISO Connector (Speaker Output, Male)**
⑰ **Fuse (10A)**
⑱ **ISO Power Supply Connector (Male)**
⑲ **Switched Power Lead (Ignition) (Red)**
Connect this lead to an open terminal on the vehicle's fuse box or another unused power source which provides (+) 12V only when the ignition is turned on or in the accessory position.
⑳ **Ground Lead (Black)**
Connect this lead to a good chassis ground on the vehicle. Make sure the connection is made to bare metal and is securely fastened using the sheet metal screw provided.
㉑ **ISO Power Supply Connector (Female)**
㉒ **Battery Lead (Yellow)**
Connect this lead to the positive (+) post of the vehicle's battery.
㉓ **Power Antenna Lead**
When loaded with a power antenna, connect to the +B terminal of the power antenna.
㉔ **Hook (Small)**
㉕ **ISO Antenna Plug**
㉖ **Antenna Receptacle**
㉗ **DIN Connector**
Connect this to the DIN connector on the CD Shuttle.
㉘ **JASO/ISO Antenna Adaptor (Included)**
㉙ **Hook (Large)**

English

Initial System Start-Up

1 When operating the unit for the first time after installation or after the vehicle's battery has been disconnected and reconnected, set the volume level to its minimum, then remove the detachable front panel. Press the Reset switch with a ball-point pen or any other pointed object.

Turning Power On and Off

Operation indicator/
Indicateur de fonctionnement/
Indicador de operación

1 Press the PWR button to turn on the unit.

Note: The unit can be turned on by pressing any button except the eject ≜ button or by inserting a cassette tape.

Press the PWR button again to turn off the unit.

Note: Only for the TDM-7535R, the operation indicator blinks when any operational button is pressed to indicate that the unit has recognized the pressing of the button.

English

Adjusting Volume/ Bass/Treble/Balance/ Fader

1 Press the MODE button repeatedly to choose the desired mode.

Note: If the ▽ or △ button is not pressed in 5 seconds after selecting the BASS, TREBLE, BALANCE and FADER modes, the unit automatically sets in the VOLUME mode.

2 Press the ▽ and △ buttons until the desired sound is obtained in each mode.

Notes:
- These buttons on the TDM-7535R have a "Dual Speed" function. Pressing lightly will change the level slowly. Pressing the buttons harder will change the level quickly. The settings of the Bass and Treble will be individually memorized for each source (FM, MW, LW, Tape and CD) until the setting is changed.
- In case that the Equalizer is connected, the Bass and Treble are adjusted on the Equalizer.

English

Turning Loudness On/Off

Loudness introduces a special low- and high-frequency emphasis at low listening levels to compensate for the ear's decreased sensitivity to bass and treble sound.

1 Press the LOUD button for at least **2** seconds to activate or deactivate the loudness mode.

Changing Lighting Colour (TDM-7535R only)

1 Press the POWER button for at least **2** seconds.

2 Press the Preset 6 button to change the lighting colour between green and amber.

3 Press the POWER button to set the lighting colour.

English

Manual Tuning

1 Press the TUNER BAND button repeatedly until the desired radio band is displayed.

2 Press the TUNE•A.ME button repeatedly until "MANUAL" is displayed.

Note: The initial mode is SEEK-DX.

3 Press the DN or UP button to move downward or upward one step respectively until the desired station frequency is displayed.

English

Automatic Seek Tuning

1 Press the TUNER BAND button repeatedly until the desired radio band is displayed.

2 Press the TUNE•A.ME button to illuminate the DX indicator in the display. With the DX mode activated, both strong and weak stations will be tuned in the Auto-Seek operation.

Press the TUNE•A.ME button again to return to the local mode. The DX indicator will turn off and only strong stations will be tuned.

3 Press the DN button or UP button to automatically seek a station downward or upward respectively.

English

Adjusting FM Signal Level

If the difference in volume levels between the FM station and the tape player is great, you can adjust the FM signal level to make the difference smaller.

1 Press the PWR button for at least **2** seconds.

2 Press the Preset 1 button to select the desired signal level.

3 Press the PWR button to preset the FM signal level in memory and deactivate the adjusting mode.

English

Manual Storing of Station Presets

1

1. Tune in the desired radio station you wish to store in the preset memory.
2. Press any one of the preset buttons (1 through 6) for at least **2** seconds until the frequency display blinks.
3. Press the preset button into which you wish to store the station while the display is blinking (within 5 seconds).
   The display changes from blinking to steady lighting indicating that the station has been memorized. The preset number is also displayed.
4. Repeat the procedure to store 5 other stations onto the same band. Use this procedure for other bands.

A total of 30 stations can be stored in the preset memory (6 stations for each band: FM1, FM2, FM3, MW, LW). The RDS stations can be preset in the FM1, FM2 and FM3 bands only.

Note: If a preset memory has already been set in the same preset location, it will be cleared and the new station will be memorized.

Radio Operation

English

Automatic Memory of Station Presets

1

Press the TUNER BAND button until the desired radio band is displayed.

2

Press the TUNE•A.ME button for at least 2 seconds. The display shows "A-MEMORY" for a second then changes the radio frequency during the auto memory operation. The tuner will automatically seek and store 6 strong stations in the selected band in order of signal strength.
When the automatic storing has been completed, the tuner goes to the station stored in the preset location No. 1.

Note: If no stations are stored, the tuner will return to the original station you were listening to before the auto storing procedure began.

English

Tuning to Preset Stations

1

Press the TUNER BAND button repeatedly until the desired band is displayed.

2

Press the station preset button that has your desired radio station in memory. The display shows the preset number, band and frequency of the station.

Cassette Player Operation

English

Inserting/Ejecting Cassette Tape

1

Insert a cassette tape into the slot with the open side facing right. When the cassette is loaded, the player automatically starts tape playback and indicates "TAPE" in the display.

2

Press the Eject (⏏) button when you want to eject the cassette tape.

Notes:
1. When power is turned off or the front panel is removed, the full-logic mechanism will automatically switch to the PAUSE mode. This protects the tape from being deformed by the pinch-rollers if left for long periods.
2. Auto Metal
   When a metal cassette tape is inserted, the player automatically adjusts to the equalization for metal or any other high bias tape for optimum sound.

English

Normal Play and Pause

1

Insert a cassette (or press the TAPE ►/II button to switch from the tuner or CD Shuttle mode if a cassette is already inside the tape player). The player begins playback. The display shows "TAPE" and "◿" or "◸" during tape playback to show the tape side being played. When the end of the tape is reached, the unit automatically stops and reverses the tape to play the other side of the tape.

2

Press the TAPE ►/II button to pause tape play. Press again to resume playback.

3

Press the Eject (⏏) button to stop the tape play and eject the cassette. The tape-direction indicator disappears.

Cassette Player Operation

English

Dolby B/C NR (Noise Reduction) (TDM-7535R/ TDM-7532R only)

1

Press the Dolby NR (DD) button in the tape mode to select the Dolby B NR or C NR to play a Dolby B NR or C NR encoded tape respectively. The DD B or DD C indicator appears to show your selection and the noise level becomes low.
The Dolby C NR is available only on the TDM-7535R.

To deactivate the Dolby NR mode, press the Dolby NR button until the DD B and DD C indicators disappear.

Repeat Play (TDM-7535R/ TDM-7532R only)

1

Press the REPEAT button to play back repeatedly the current programme being played. The RPT indicator appears and the programme will be played repeatedly.

Press the REPEAT button to stop the repeat play. The RPT indicator disappears.

English

Fast Forward and Rewind

1

Press the REW or FF button during tape play to fast rewind or forward the tape respectively. The tape side indicator (◿ or ◸) blinks and >> or << moves.
When the end of the tape is reached in the rewind mode, the player stops automatically and begins playing from the beginning of the same side. When the end of the tape is reached in the fast forward mode, the player stops automatically and begins playing from the beginning of the opposite side.

2

Press the TAPE ►/II button to stop fast rewinding or forwarding to resume tape play. The tape side indicator changes to steady lighting.

Blank Skip (B.SKIP) (TDM-7535/ TDM-7532R only)

1

Press the B.SKIP button during tape play to skip over blank portions of the tape lasting 15 seconds or longer. "B.SKIP" appears on the display.

Press the B.SKIP button to cancel the blank skip mode. "B.SKIP" disappears from the display.

Cassette Player Operation

English

Scanning Programmes (TDM-7535R only)

1

Press the SCAN button to play the first 10 seconds of each programme on the tape. "SCAN" appears on the display.

Press the SCAN button to cancel the scanning when the desired programme is found.

Note: The SCAN operation cannot detect blank sections of less than 4 seconds.

Manual Reverse

1

Press the Preset 6 button during tape play to change the tape direction to play the other side of the tape. The tape side indicators (◿ and ◸) change to show which side of the cassette is being played.

English

Programme Sensor (P.S.) (TDM-7535R/ TDM-7532R only)

1

Press the P.S. DN button once to return to the beginning of the current selection being played. If you wish to return to a selection further back, press repeatedly until the number of selections you would like to skip is shown in the display.
The display will show PS-1 with the first press and will increase by one with each successive press up to PS-9. The tape indicator will blink showing the direction of your search.

Press the P.S. UP button once to advance to the beginning of the next selection. If you wish to advance to a selection further ahead, press repeatedly until the number of selections you would like to skip is shown in the display.
The display will show PS+1 with the first press and will increase with each successive press up to PS+9. The tape indicator will blink showing the direction of your search during searching operation.

2

To stop the programme searching, press the tape ►/II button.

Notes:
- The programme sensor feature is functional in the tape play mode only.
- You can advance to the 9th (max.) programme or return to the 8th (max.) programme.

CD Shuttle Operation

English

Controlling CD Shuttle (Optional)

If an optional Alpine 6-disc CD Shuttle is connected to the 8-pin DIN connector of the TDM-7535R/TDM-7532R/TDM-7531R, you can control the CD Shuttle using the TDM-7535R/TDM-7532R/TDM-7531R.

Notes: The controls on the TDM-7535R/ TDM-7532R/TDM-7531R for the CD operation are operative only when the CD Shuttle is interconnected with the TDM-7535R/TDM-7532R/ TDM-7531R.

1 DISC ►/II — D3 T05 2'58

The display example shows when playing the Track 5 on the Disc 3.

Press the DISC ►/II button to activate the connected CD Shuttle.
The display shows the disc number and track number.

2 1 DD B/C, 2 P.S. DN, 3 P.S. UP, 4 B.SKIP, 5, 6 PROG

Press the Preset buttons to select the desired disc loaded in the CD Shuttle.

3 DISC ►/II — D3 T05 PAU

Press the DISC ►/II button to pause CD play. The display shows "PAU."
To resume CD play, press again.
The PAU indicator disappears.

English

Music Sensor (M.S.) Skip

1 DN ⏮ REW — D3 T05 2'36 ↓ D3 T05 0'00 ↓ D3 T04 0'00

Momentarily press the DN ⏮ button once to return to the beginning of the current track. If you wish to return to the beginning of a track further back, repeatedly press until you reach the desired track. (The display example shows when you are playing the track No. 5 of the disc 3.)

UP ⏭ FF — D3 T05 2'36 ↓ D3 T06 0'00

Press the UP ⏭ button once to advance to the beginning of the next track. If you wish to advance to a track further ahead, press repeatedly until the desired track is reached.

Note: The music sensor feature is functional in the play or pause mode.

Fast Forward and Backward

1 DN ⏮ REW, UP ⏭ FF

Press and hold the ⏮ DN or UP ⏭ button to quickly move backward or forward respectively until you reach the desired portion.

Note: This feature works only in the CD playback mode.

CD Shuttle Operation

English

Repeat Play on Single Track or Entire Disc

1 TUNE•A.ME REPEAT — ↓ RPT ↓ RPT ALL

Press the REPEAT button to display "RPT" or "RPT ALL" to play back repeatedly the current track being played or the entire disc selected.

Note: Single track cannot be repeated during M.I.X. play.

M.I.X. (Random) Play

1 SCAN M.I.X. — D3 M.I.X T05 2'55 ↓ D3 T05 2'55

Press and hold the M.I.X. button for at least **2** seconds during CD play or in the pause mode until the M.I.X. indicator appears. The display shows the disc number, elapsed time, "M.I.X." and track number being played. The tracks on the disc will be played back in a random sequence.
After all the tracks on the disc have been played back, the player loads the next disc and begins a random sequence play on the next disc.

Press and hold the M.I.X. button for at least **2** seconds again until the M.I.X. indicator disappears to cancel the M.I.X. play.

RDS (Radio Data System)

English

The RDS (Radio Data System) is a radio information system using the 57 kHz subcarrier of regular FM broadcast. The RDS allows you to receive a variety of information such as traffic information, station names, and to automatically re-tune to a stronger transmitter that is broadcasting the same programme.

Setting RDS Reception Mode and Receiving

1 INTLZ PWR

Press and hold the INTLZ (Initialize) button for at least **2** seconds.

2 3 P.S. UP — AF ON ↓ AF OFF

Press repeatedly the Preset 3 button to select the AF (Alternative Frequencies) ON or OFF mode.

Note: Use the AF OFF mode when automatic re-tuning is not required.

3 INTLZ PWR

Press the INTLZ button to activate the selected mode.

4 RDS — RDS

Press the RDS button to activate the RDS mode.

English

5 DN ⏮ REW, UP ⏭ FF — BBC R3

Press the DN or UP button to tune in the desired RDS station:
When the station signal being received has become weak:
A. In the AF ON mode the unit automatically re-tunes to a stronger station that carries the same programme.

RDS — AF SEEK ↓ SEEK END

B. In the AF OFF/AF ON mode
Press and hold the RDS button for at least **2** seconds to have the unit automatically search for a stronger station in the AF (Alternative Frequencies) list.
If there is no AF station, the display shows "SEEK END."

6 RDS

Press the RDS button again to deactivate the RDS mode.

RDS (Radio Data System)

English

Recalling Preset RDS Stations

1 RDS — RDS

Press the RDS button to activate the RDS mode.

2 BBC R3 — 1 DD B/C, 2 P.S. DN, 3 P.S. UP, 4 B.SKIP, 5, 6 PROG

Press the preset location button in which your desired RDS station is preset. If the preset station's signal is weak, the unit automatically searches and tunes to a stronger station in the AF (Alternative Frequencies) list.

3 PI SEEK — 1 DD B/C, 2 P.S. DN, 3 P.S. UP, 4 B.SKIP, 5, 6 PROG

If the preset station and the stations in the AF list cannot be received:

Press the same preset location button again to search again for a station in the PI (Programme Identification) list.
If there are still no stations receivable in the area, the unit displays the frequency of the preset station and the preset indicator disappears. If the signal level of the Regional (Local) station being tuned becomes too weak to receive, press the same preset location button to tune in a Regional station in other district.

Note: For presetting the RDS stations, refer to the Radio Operation section of the Owner's Manual. The RDS stations can be preset in the F1, F2 and F3 bands only.

English

Receiving RDS Regional (Local) Stations

1 INTLZ PWR

Press and hold the INTLZ button for at least **2** seconds.

2 4 B.SKIP — REG ON ↕ REG OFF

Press the Preset 4 button to turn on or off the REG (Regional) mode.
In the REG ON mode, the unit automatically keeps receiving the related local RDS station.

3 INTLZ PWR

Press the INTLZ button to activate the selected mode.

4 RDS — RDS

Press the RDS button to activate the RDS mode.

English

5

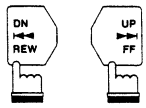

Press the DN or UP button to tune in the desired local (Regional) RDS station.

6

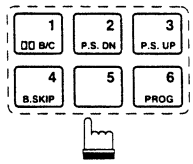

Press repeatedly the preset location button corresponding to your desired station during reception of a Regional station to search for a receivable Regional station. Each pressing tunes in another receivable Regional station.

English

Receiving Traffic Information

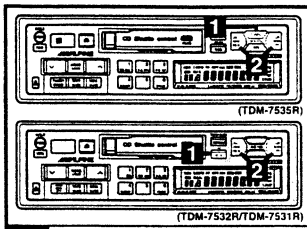

1

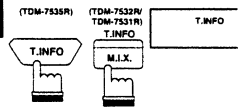

Press the T.INFO button to display the T.INFO indicator.

2

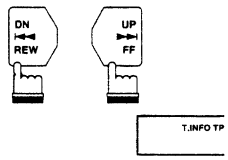

Press the DN or UP button to select your desired traffic information station. When a traffic information station is tuned in, the TP indicator lights up.

Traffic information is heard only when it is being broadcast. If traffic information is not being broadcast, the unit is set in the standby mode. When a traffic information broadcast begins, the unit automatically receives it, the display shows "TRF-INFO", and within 5 seconds the PS (Programme Service Name) being received appears.

When traffic information broadcast is over, the unit will automatically set in the standby mode.

Notes:
- If the traffic information broadcast signal falls below a certain level, the unit remains in the receiving mode for 1 minute. If the signal remains below a certain level for over 1 minute, the unit is set in the standby mode for the traffic information broadcast.
- If you do not want to listen to the traffic information being received, lightly press the T. INFO button to skip that traffic information message. The T. INFO mode will remain in the ON position to receive the next traffic information message.

RDS (Radio Data System)

English

Receiving Traffic Information While Playing Casstte or Radio

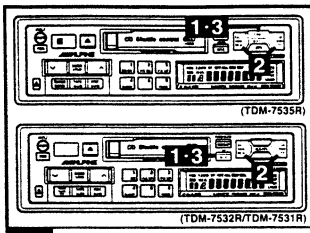

1

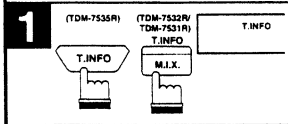

Press the T.INFO button until the T.INFO indicator appears.

2

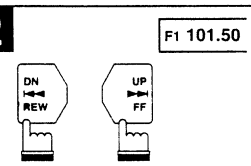

Press the DN and UP buttons to select a traffic information station if necessary.

- When a traffic information broadcast starts, the unit automatically mutes the cassette tape or the regular FM broadcast.
- When the traffic information broadcast finishes, the unit automatically returns to the original source play before the traffic information broadcast began.
- **When traffic information stations cannot be received:**
  In the tuner mode:
  When the TP signal can no longer be received, an alarm will be sounded after 1 minute.
  In the tape mode:
  When the TP signal can no longer be received, the traffic information station of another frequency will be selected automatically.

Note: The receiver is equipped with the EON (Enhanced Other Networks) function in order to keep track of additional alternative frequencies to the AF list. If the station being received does not broadcast the traffic information, the receiver automatically tunes in the related station that broadcasts the traffic information when it occurs.

English

3

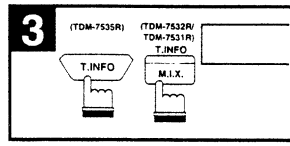

Press the T.INFO button to deactivate the Traffic Information mode.

Presetting Volume Level for Traffic Information

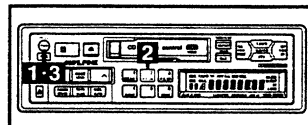

1

Press and hold the INTLZ button for at least 2 seconds.

2

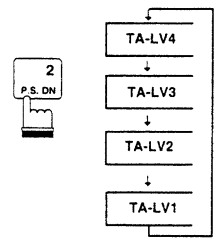

Press the Preset 2 button repeatedly until the desired volume level is obtained.

3

Press the INTLZ button again to preset the volume level for the traffic information listening.
When a traffic information broadcast starts, the unit automatically adjusts the volume to the preset level.

RDS (Radio Data System)

English

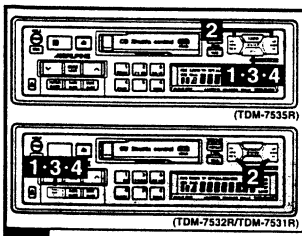

PTY (Programme Type) Tuning

1

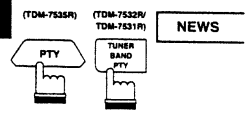

Press the PTY button (for at least 2 seconds for the TDM-7532R/TDM-7531R) to activate the PTY mode. The PTY (Programme Type) of the station being currently received will be displayed for 5 seconds.

- If there is no receivable PTY broadcast, "NONE" will be displayed for 5 seconds.
- If no RDS station can be received, the display shows "NO RDS."

Note: If no button is pressed within 5 seconds after pressing the PTY button, the PTY mode will be automatically cancelled.

2

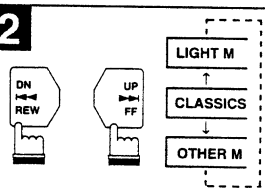

Press the DN and UP buttons within 5 seconds to choose the desired programme type while the PTY (programme type) is being displayed.

3

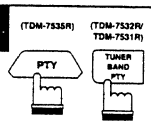

Press the PTY button within 5 seconds after selecting the programme type to start searching for a station in the selected programme type.
The chosen programme type indicator blinks during searching and lights when a station is found.

If no station is found, "NO PTY" will be displayed for 5 seconds.

English

4

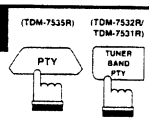

Press the PTY button (for at least 2 seconds for the TDM-7532R/TDM-7531R) to cancel the PTY mode.

RDS (Radio Data System)

English

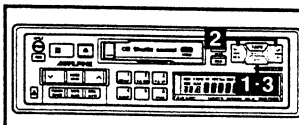

Priority PTY (Programme Type) (TDM-7535R ONLY)

This function allows presetting of a programme type such as music category, news, etc. You can listen to a programme in the preset programme type as the unit automatically gives priority to the preset programme type when it begins broadcasting, and interrupts the programme you are currently listening. This feature is functional when your unit is set to a mode other than the LW and MW.

1

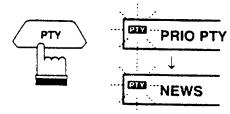

Press and hold the PTY button for **2** seconds to activate the PRIORITY PTY mode.
"PRIO PTY" is displayed for 2 seconds and then the program type for 5 seconds. The initial setting is "NEWS."

Note: If no button is pressed within 5 seconds after pressing the PTY button, the PRIORITY PTY mode is automatically cancelled.

2

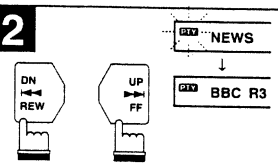

Press the DN or UP button within 5 seconds while "NEWS" is being displayed to choose a desired programme type. Then press and hold the PTY button for **2** seconds. The PRIORITY PTY function will activate.

3

Press and hold the PTY button for **2** seconds to activate the PRIORITY PTY mode again.

- To change the program category, perform the step 2.
- To disable the PRIORITY PTY function, press the PTY button for less than **2** seconds.

Note: In the PRIORITY PTY function, unlike in the T.INFO function, the volume does not increase during operation.

English

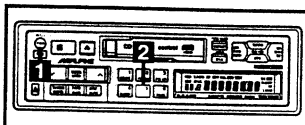

Turning Emergency Alarm On or Off

1

Press and hold the INTLZ button for at least **2** seconds.

2

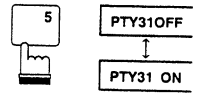

Press the Preset 5 button repeatedly to select the PTY31 ON or PTY31 OFF mode. In the PTY31 ON mode, the unit will produce an alarming sound when the unit receives the PTY31 (Emergency Broadcast) signal.

Disassembly Instructions

1. Removal of Nose Unit

(1) Refer to the Owner's Manual (Part No. 68P61329W47).

2. Removal of Front Escutcheon

(1) After removal of Assy., Face Plate and Top Cover, remove the Hooks (a) as shown in Figure 1

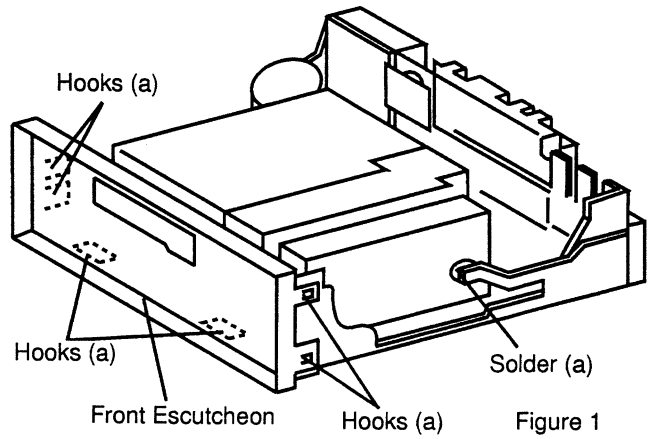

Figure 1

3. Removal of Cassette Deck

(1) After removal of Front Escutcheon, remove three screws marked "○" and the Hook (b) as shown in Figure 2.

(2) Disconnect one Connector from the Cassette Deck.

4. Removal of Main P.C.Board

(1) Remove the four screws marked "●" as shown in Figure 3.

(2) Remove the solder (a) and Hooks (c) as shown in Figure 1, 2.

(3) Disconnect two Connectors from the Main P.C.Board.

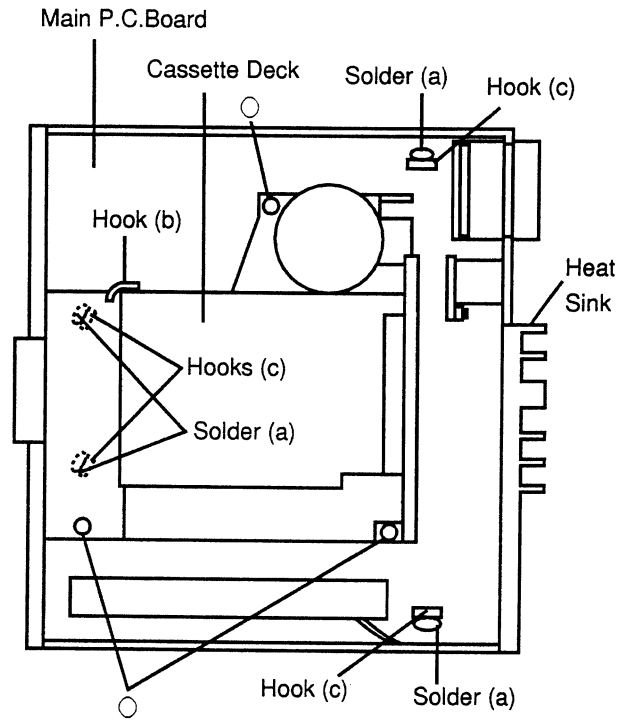

Figure 2

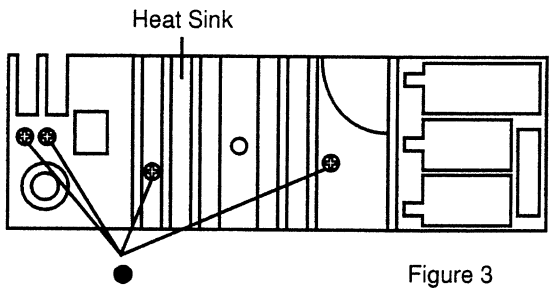

Figure 3

5. Removal of Front P.C.Board

(1) After removal of Nose Unit, remove two screws marked "△" and the Hooks (d) as shown in Figure 4.

(2) Remove the Hooks (e) as shown in Figure 4.

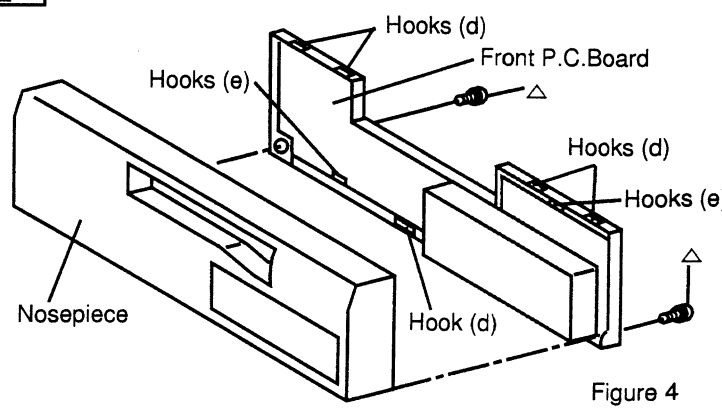

Figure 4

Adjustment Procedures

1. FM SECTION

(1) Dummy Antenna Circuit

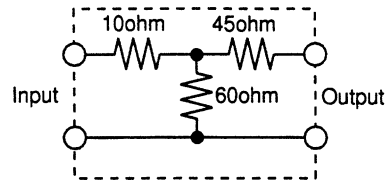

For 50 ohm FM Signal Generator

Figure 5

(2) Connections

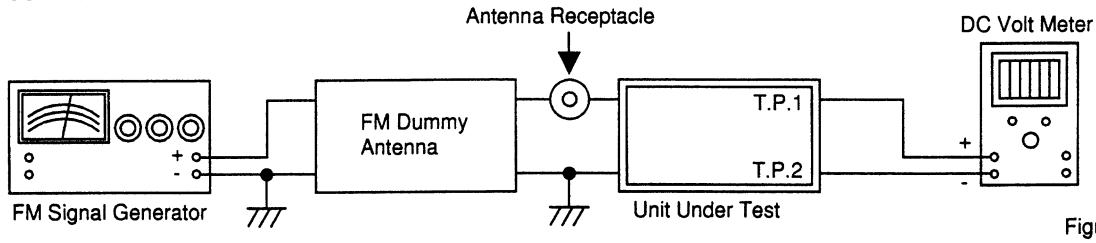

Figure 6

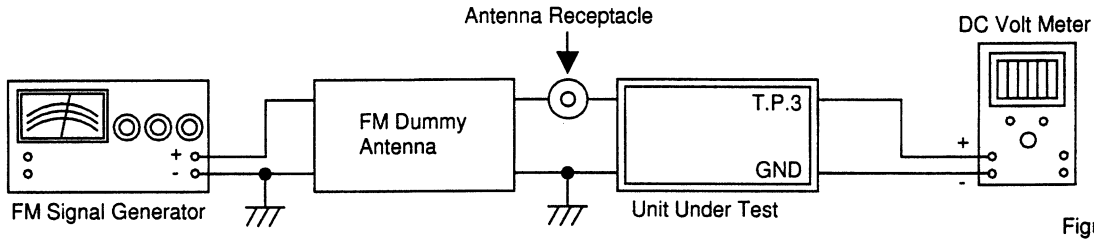

Figure 7

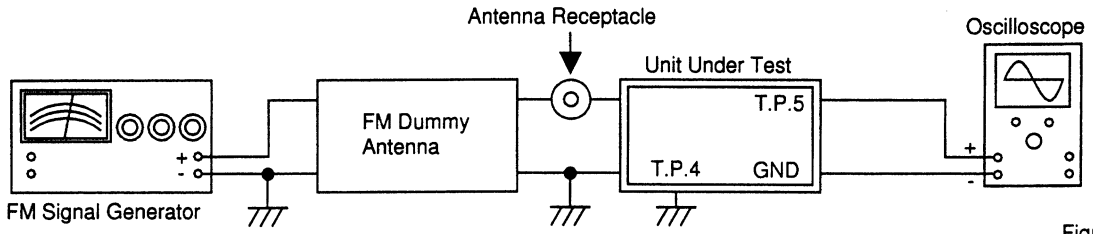

Figure 8

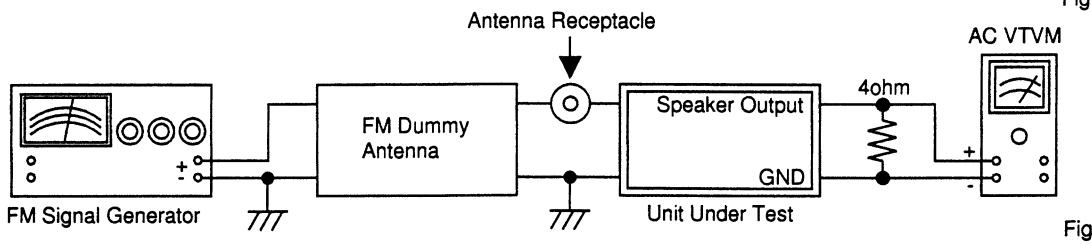

Figure 9

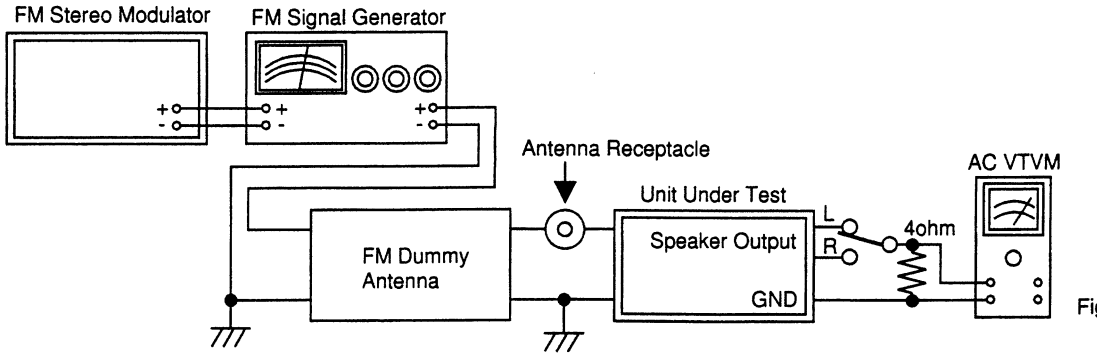

Figure 10

(3) Control Settings

Power Switch ..... ON

Fader Control ..... Center Position

Balance Control ..... Center Position

Treble / Buss Control.....Center Position

Band Switch ..... FM

Others ..... OFF

(4) Adjustment Procedures

Step	Description		Connection	Signal Generator	Dial Control	Test Point	Adjustment
1	IF Adjustment		Figure 6	98.1MHz, 72dB (Mod. OFF)	98.1MHz	T.P.1 T.P.2	Adjust L2101 to 0 ±15mV.
2	Signal Meter Adjustment		Figure 7	98.1MHz, 46dB (Mod. 400Hz, Dev. 40kHz)	98.1MHz	T.P.3	Adjust VR2101 to 3.5 ±0.1V
3	Seek Stop Adjustment		Figure 8	98.1MHz, 30dB (Mod. OFF)	98.1MHz	T.P.4 T.P.5	Adjust VR2104 for the waveform changing to maximum output. Figure : Waveform of T.P.5 output. 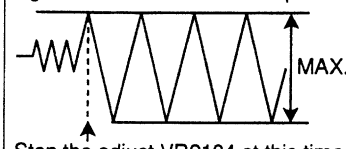 Stop the adjust VR2104 at this time.
4	Noise Level Adjustment	(1)	Figure 9	98.1MHz, 72dB (Mod. 400Hz, Dev. 40kHz)	98.1MHz	Speaker Output	Adjust MAIN VOLUME (S411 (○□), S422 (○□), S418 (△), S428 (△)) to obtain 2V output. This value is 0dB.
		(2)	Figure 9	98.1MH, -19dB (Mod. 400Hz, Dev. 40kHz)	98.1MHz	Speaker Output	Adjust VR2105 to -25 ±3dB output at SG level minimum.
5	Stereo Blend Adjustment (Lch)		Figure 10	98.1MHz, 40dB (Mod. 1kHz, Dev. 36kHz, Stereo, Lch Only)	98.1MHz	Speaker Output	Adjust VR2102 for Lch and Rch output level difference to be 8 ±2dB.
6	Stereo Separation Adjustment (Lch)		Figure 10	98.1MHz, 72dB (Mod. 1kHz, Dev. 36kHz, Stereo, Lch Only)	98.1MHz	Speaker Output	Adjust VR2103 for Rch output to be minimum, and confirm Lch and Rch output level difference is more than 20dB.
7	Stereo Blend Adjustment (Rch)		Figure 10	98.1MHz, 40dB (Mod. 1kHz, Dev. 36kHz, Stereo, Rch Only)	98.1MHz	Speaker Output	Proceed same adjustment under step 5.
8	Stereo Separation Adjustment (Rch)		Figure 10	98.1MHz, 72dB (Mod. 1kHz, Dev. 36kHz, Stereo, Rch Only)	98.1MHz	Speaker Output	Proceed same adjustment under step 6 by alternating Lch and Rch.

Note : ○ : For TDM-7531R Model Only, □ : For TDM-7532R Model Only ,
△ : For TDM-7535R Model Only, Others : Common.

2 TAPE PLAYER SECTION

(1) Connections

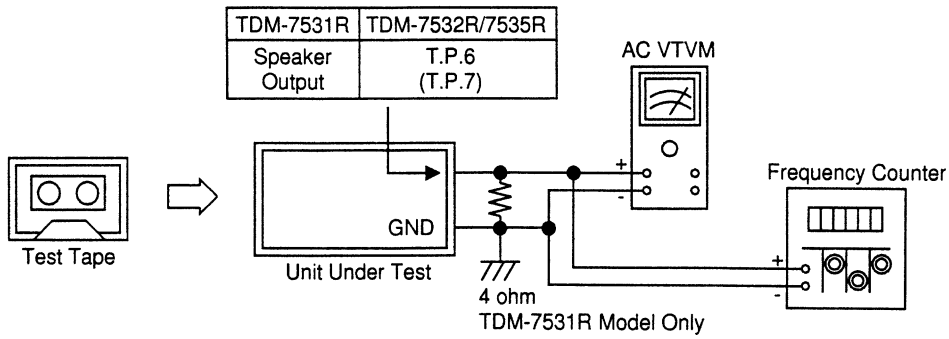

Figure 11

(2) Control Settings

Power Switch ..... ON
Fader Control ..... Center Position
Balance Control ..... Center Position
Treble / Buss Control.....Center Position
Others ..... OFF

(3) Adjustment Procedures

Step	Description	Test Tape	Connection	Test Point		Adjustment Point	Adjustment
1	Head Azimuth Adjustment	MTT-114NB (14kHz)	Figure 11	○	Speaker Output	Head Azimuth Adjustment Screws (Figure 12)	Adjust for Max. and same level output at Normal and Reverse positions.
				□ △	T.P.6 (Lch) T.P.7 (Rch)		
2	Dolby Level Adjustment (TDM-7532R/ 7535R Model Only)	MTT-150 (400Hz)	Figure 11	T.P.6 (Lch) T.P.7 (Rch)		VR201 (Lch) VR202 (Rch)	Adjust for 245mV (□)/388mV(△) ± 1dB at T.P.6 (Lch) and T.P.7 (Rch).
3	Tape Speed Adjustment	MTT-111N (3kHz)	Figure 11	○	Speaker Output	Tape Speed Adjustment (Figure 13)	Adjust for 2,970 to 3,090Hz at T.P.6 (T.P.7).
				□ △	T.P.6 (Lch) or T.P.7 (Rch)		

Note : ○ : For TDM-7531R Model Only, □ : For TDM-7532R Model Only ,
△ : For TDM-7535R Model Only, Others : Common.

Adjustment Locations

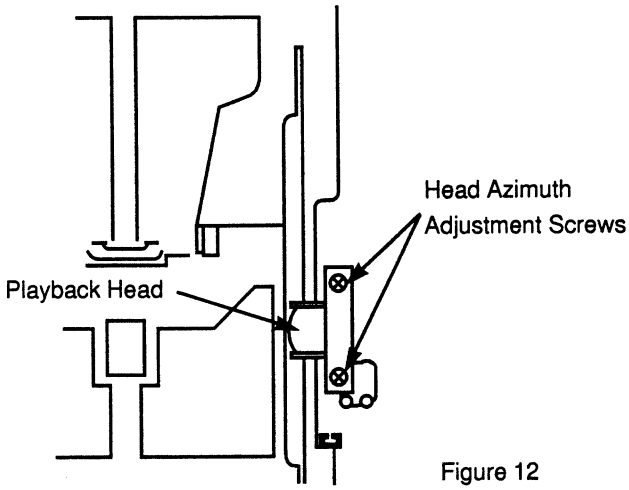

Figure 12

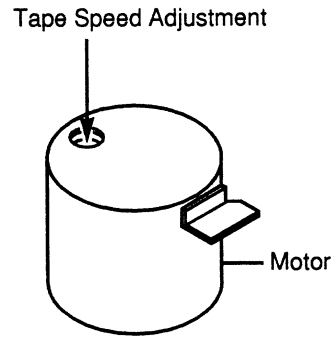

Figure 13

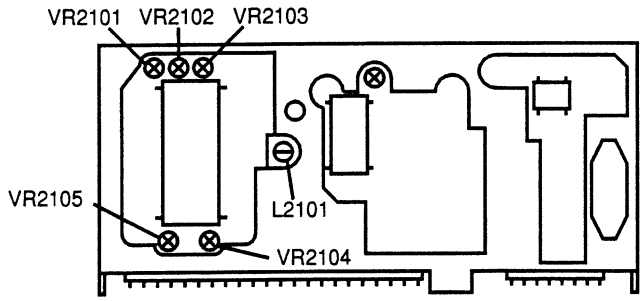

FM / MW/LW Tuner Unit (FE001)

Note : For the Adjustment parts (S411(○□), S422(○□), S418(△), S428(△), VR201, VR202) and Test Points, refer to the Parts Layout on P.C.Boards and Wiring Diagram.

Description of IC Terminal

45609W26 : IC501

No.	Symbol	I/O	Terminal Description
1	NOSE ON	I	Front panel detection terminal.
2	AV_{REF}	I	Reference voltage input terminal for A/D converter.
3	V_{DD}	—	V_{DD} terminal.
4			
5	AV REF OUT	O	Reference voltage output terminal to A/D converter.
6	PLAY SOL	O	Play Solenoid control signal output terminal in deck mechanism.
7	RF SOL	O	RF Solenoid control signal output terminal in deck mechanism.
8	EJECT SOL	O	Eject Solenoid control signal output terminal in deck mechanism.
9	MOTOR CONT	O	Determins rotation direction of motor in deck mechanism.
10	O. MOTOR	O	Determins start and stop of motor in deck mechanism.
11	FOR/$\overline{REV}$	O	FOR/REV indicator output terminal.
12	O. FAST	O	Gain control signal output terminal to MS IC.
13	PACK IN	I	Switch to detect cassette is installed into cassette holder or not.
14	M.S.DET	I	Music ON/OFF switching signal input terminal.
15	GND	—	GND short.
16			
17			
18	AREA0	I	Initial setting input terminal.
19	AREA1		
20	TP ALARM	O	ALARM signal output terminal (at TP OFF ALARM).
21	NC	—	Open.
22	PWR IC ON	O	Stand-by control signal output terminal to Power IC.
23	POWER CONT	O	Power control signal output terminal to Audio line and lighting.
24	A.MUTE	O	Audio mute signal output terminal.
25	NC	—	Open.
26			
27			
28	IN INT	I	INT signal input terminal.
29	CHG D-OUT	O	BUS line output terminal to CD changer.
30	E.VOL. CLK	O	Serial clock data output terminal to Electrical Volume.
31	E.VOL. DATA	O	Serial data output terminal for Electrical Volume.
32	NC	—	Open.
33	GND	—	GND short.
34	NC	—	Open.
35	$\overline{DOLBY\ C}$	O	Dolby C NR ON/OFF signal output terminal.
36	$\overline{DOLBY\ B}$	O	Dolby B NR ON/OFF signal output terminal.
37	LCD CE	O	CE signal output terminal to LCD Driver.
38	DTS CE	O	CE signal output terminal to DTS microcomputer (IC504).

No.	Symbol	I/O	Terminal Description
39	DTS START	O	Data sync signal output terminal to DTS microcomputer (IC504).
40	NOSE POWER	O	Power control signal output terminal to Front panel.
41	LED IND	O	Action indicator output terminal.
42	LCD CLK	O	Clock signal output terminal to LCD Driver.
43	$\overline{\text{GRN}}$/ORG	O	ILLUMI Control signal output terminal.
44	LCD DATA	O	Data output terminal to LCD Driver.
45	$\overline{\text{LCD INH}}$	O	INH signal output terminal to LCD Driver.
46	$\overline{\text{DTS MUTE}}$	I	Audio mute signal input terminal from DTS microcomputer (IC504).
47	ACC+5	I	ACC power supply detection terminal.
48	CHG D-IN	I	BUS line input terminal to CD changer.
49	REMOCON	I	Data input terminal from Remocon receiver.
50	DTS STATUS	I	Serial data input terminal from DTS microcomputer (IC504).
51	DTS CMD	O	Serial data output terminal to DTS microcomputer (IC504).
52	$\overline{\text{DTS SCK}}$	O	Communication sync signal output terminal to DTS microcomputer (IC504).
53	BATT+5V	I	BATT detector terminal.
54 55	GND	—	GND short.
56	NC	—	Open.
57	GND	—	GND short.
58	X1	I	Input terminal for system clock OSC.
59	X2	O	Output terminal for system clock OSC.
60	$\overline{\text{RESET}}$	I	System reset signal input terminal.
61 ~ 75	GND	—	GND short.
76	PACK DOWN	I	Switch to detect cassette holder is moved down completely.
77	RUN DET	I	Signal showing take-up reel is roating or not.
78	KEY-IN AD0	I	KEY input terminal.
79	KEY-IN AD1		
80	KEY-IN AD2		

75099W04 : IC504

No.	Symbol	I/O	Terminal Description
1	LW	O	LW band selection terminal.
2	LO/$\overline{\text{DX}}$	O	Local/DX control terminal.
3	NC	—	Open.
4	AV_{SS}	—	GND potential terminal for A/D converter.
5	$\overline{\text{LPF SW}}$	O	LPF time constant switching terminal at AF CHECK/SW.
6	IF MUTE	O	Mute signal output terminal at AF check.
7	AV_{REF1}	I	Reference voltage input terminal for A/D Converter.
8	PLL UP	—	Pull up terminal.

No.	Symbol	I/O	Terminal Description
9 10	NC	—	Open.
11	PLL CLK	O	Clock output terminal to PLL.
12	PLL DATA	O	Data output terminal to PLL.
13	PLL CE	O	Data communication control signal output terminal to PLL.
14	DTS MUTE	O	Audio mute output terminal.
15	DTS START	I	DTS data start input terminal.
16	DTS CMD	I	Serial data input terminal from Main microcomputer (IC501).
17	DTS STATUS	O	Serial data output terminal to Main microcomputer (IC501).
18	DTS CLOCK	I	Communication data sync signal input terminal form Main microcomputer (IC501).
19 ~ 32	NC	—	Open.
33	V_{SS}	—	GND potential terminal.
34 ~ 57	NC	—	Open.
58	FM/$\overline{AM}$	O	FM/AM power control terminal.
59	AUDIO IN	I	Audio xerox input terminal.
60	$\overline{RESET}$	I	System reset input terminal.
61	RDS CLK	I	RDS clock input terminal.
62	RDS DATA	I	RDS data input terminal.
63	DTS CE	I	Terminal to make Main microcomputer (IC501) in stand-by status.
64 ~ 66	NC	—	Open.
67	50K REF	O	L.P.F. swithing output terminal at RDS mode.
68	V_{DD}	—	Positive power supply terminal.
69	X2	O	Output terminal for system clock OSC.
70	X1	I	Input terminal for system clock OSC.
71	V_{SS}	—	GND short.
72	NC	—	Open.
73	PLL D-IN	I	Data input terminal from PLL.
74	AV_{DD}	—	Analog power supply terminal for A/D converter.
75	AV_{REF0}	I	Reference voltage input terminal for A/D converter.
76	S.METER	I	Signal meter input terminal.
77	ADJ-ON	I	Port detects adjoining rejection interference of station.
78	MULTI PATH	I	Port detects multi path interference of station.
79	$\overline{ST}$	I	ST signal input terminal.
80	SD	I	Station detector signal input terminal for FM/AM (MW/LW).

LCD Display

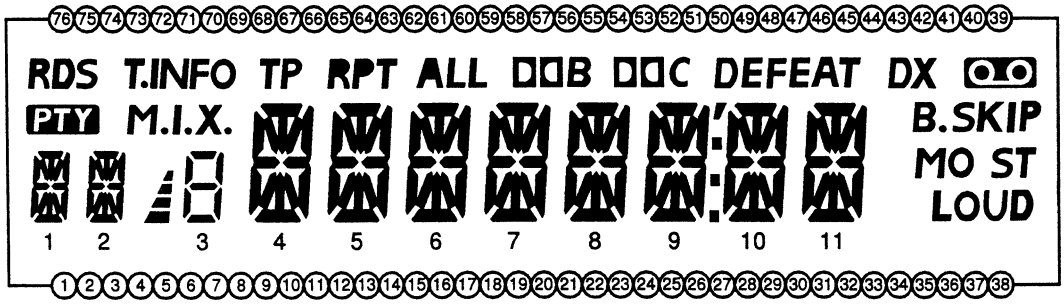

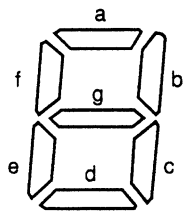

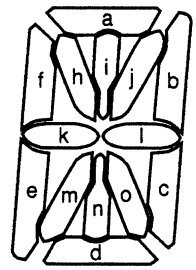

PIN No.	COM1	COM2	COM3	PIN No.	COM1	COM2	COM3
1				39			COM3
2				40		COM2	
3	1-h	1-k	1-m	41	COM1		
4	1-j	1-l	1-o	42		ST	LOUD
5	2-j	2-l	2-c	43	DX	B.SKIP	MO
6	3-f	3-g	3-e	44	11-b	11-c	11-d
7				45	11-j	11-l	11-o
8				46	11-a	11-i, 11-n	11-m
9				47	11-h	11-k	11-e
10				48	DEFEAT	11-f	10-c
11				49	10-j	10-i, 10-n	10-d
12				50	10-f	10-k	10-e
13				51			
14	5-b	5-l	5-o	52	9-a	9-b	9-c
15	6-h	6-k	6-e	53	9-f	9-k	9-m
16	6-a	6-i, 6-n	6-m	54	DDC	8-b	9-e
17	7-f	7-e	6-d	55	8-h	8-k	8-m
18	7-h	7-k	7-m	56	DDB	7-b	7-c
19	7-j	7-l	7-o	57	7-a	7-i, 7-n	7-d
20	8-f	8-e	8-d	58	ALL	6-b	6-c
21				59	6-j	6-l	6-o
22				60	RPT	6-f	5-c
23	8-a	8-i, 8-n	8-o	61	5-j	5-i, 5-n	5-d
24	8-j	8-l	8-c	62	5-a	5-h	5-m
25	9-h	9-i, 9-n	9-d	63	5-f	5-k	5-e
26	9-j	9-l	9-o	64	TP	4-b	4-c
27	10-a	10-h	10-m	65	4-j	4-l	4-o
28	10-b	10-l	10-o	66	4-a	4-i, 4-n	4-d
29				67	4-h	4-k	4-m
30				68	4-f	3-b	4-e
31				69	M.I.X.	3-a, 3-d	3-c
32				70	T.INFO	2-b	
33				71	2-a	2-i, 2-n	2-o
34				72	2-h	2-k	2-m
35				73	2-f	2-e	2-d
36				74	PTY	1-b	1-c
37				75	1-a	1-i, 1-n	1-d
38				76	RDS	1-f	1-e

Block Diagram

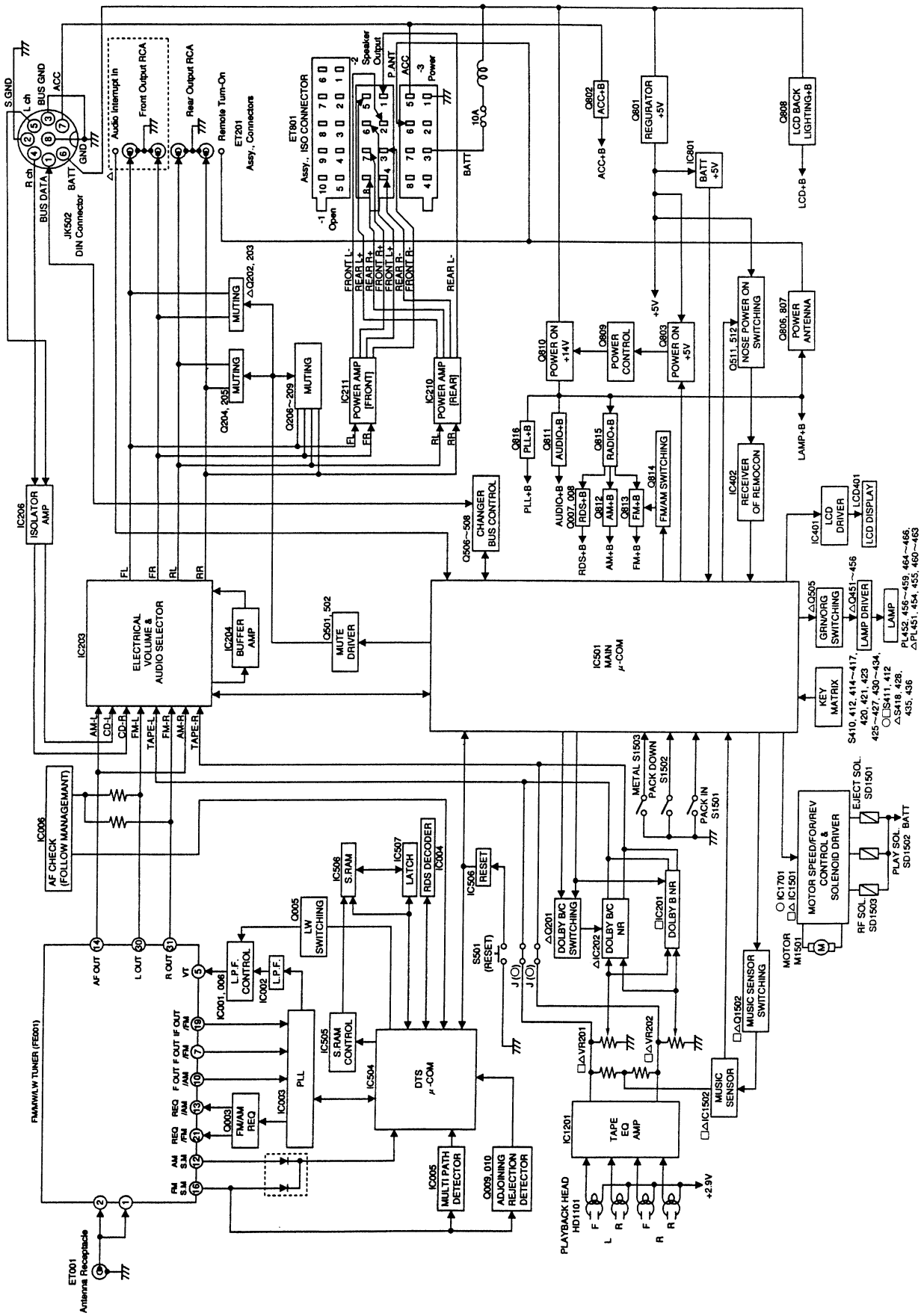

Tuner Schematic Diagram

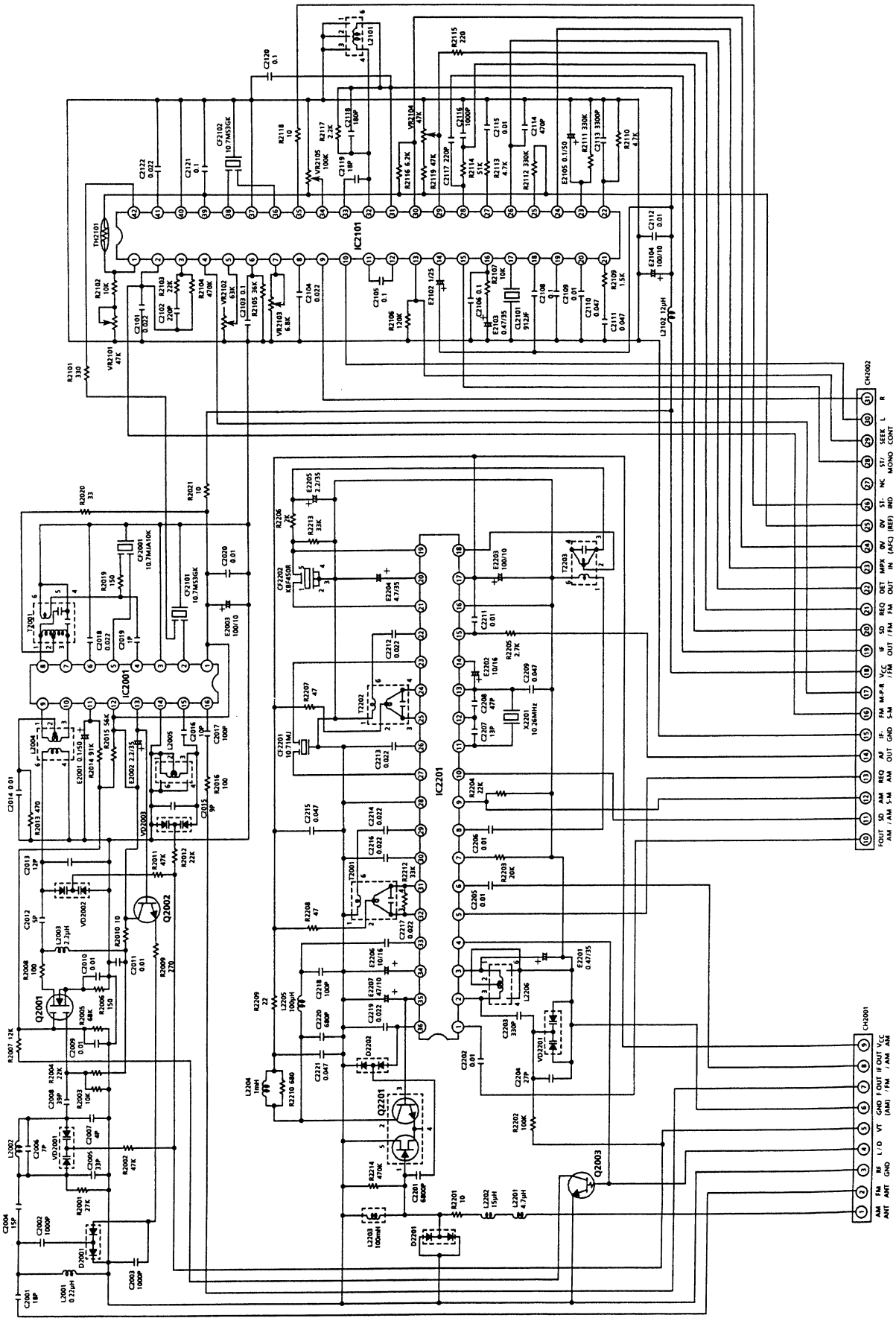

MEMO

Parts Layout on P.C. Boards and Wiring Diagram (1/2)

1

2

3

4

5

ET801

1 BATT	9 NC
2 BATT	10 RR−
3 FR+	11 GND
4 FR−	12 RL+
5 FL+	13 RL−
6 NC	14 P.ANT
7 FL−	15 ACC
8 RR+	16 NC

○□ ET201 Assy, Connectors

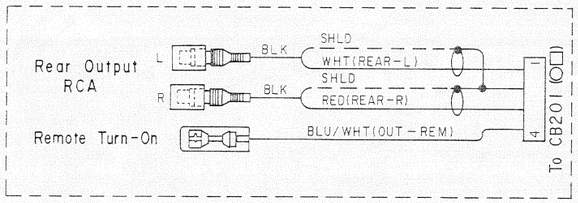

△ET201 Assy, Connectors

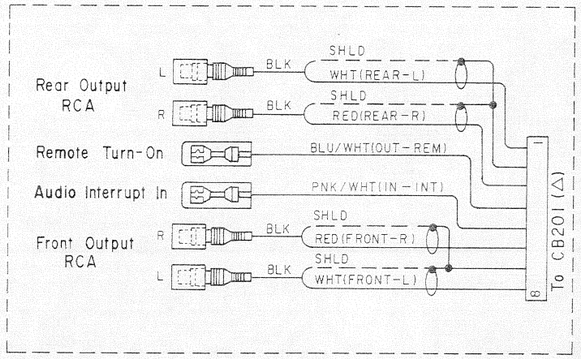

Note :

○ : For TDM−7531R Model Only,

□ : For TDM−7532R Model Only,

△ : For TDM−7535R Model Only,

Others : Common

Main P.C.Board (Component Side View)

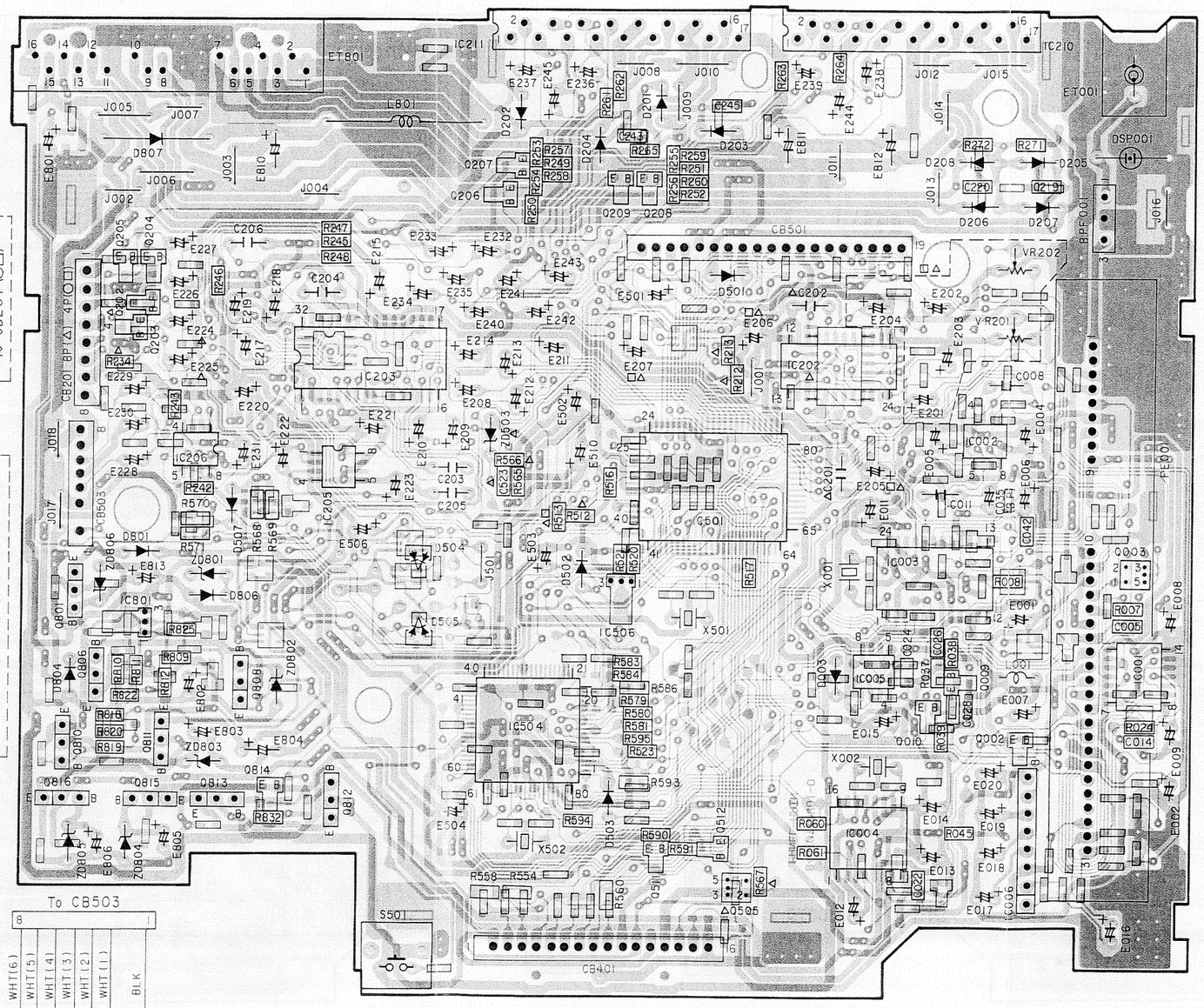

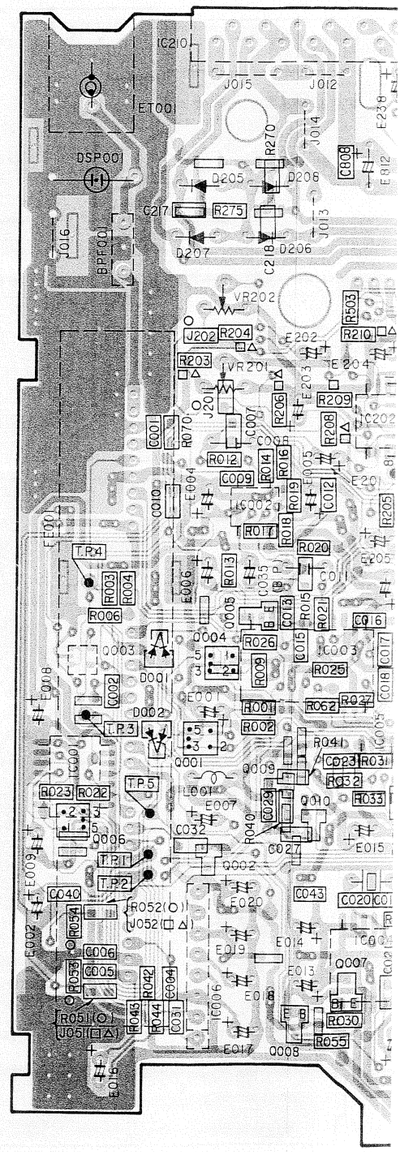

A B C D E F G H

Parts Layout on P.C. Boards and Wiring Diagram (1/2)

1

2

3

4

5

ET801

1 BATT	9 NC
2 BATT	10 RR−
3 FR+	11 GND
4 FR−	12 RL+
5 FL+	13 RL−
6 NC	14 P.ANT
7 FL−	15 ACC
8 RR+	16 NC

○□ ET201 Assy, Connectors

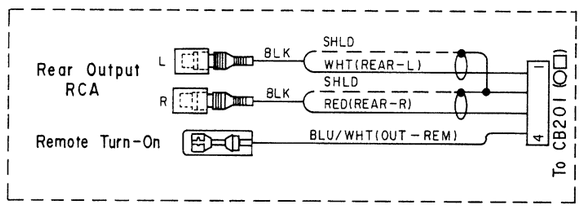

△ET201 Assy, Connectors

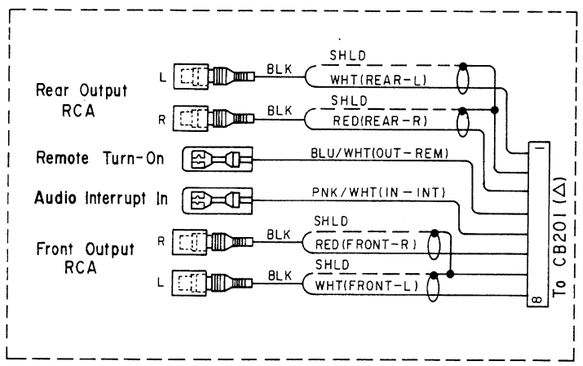

Note :

○ : For TDM−7531R Model Only,

□ : For TDM−7532R Model Only,

△ : For TDM−7535R Model Only,

Others : Common

Main P.C.Board (Component Side View)

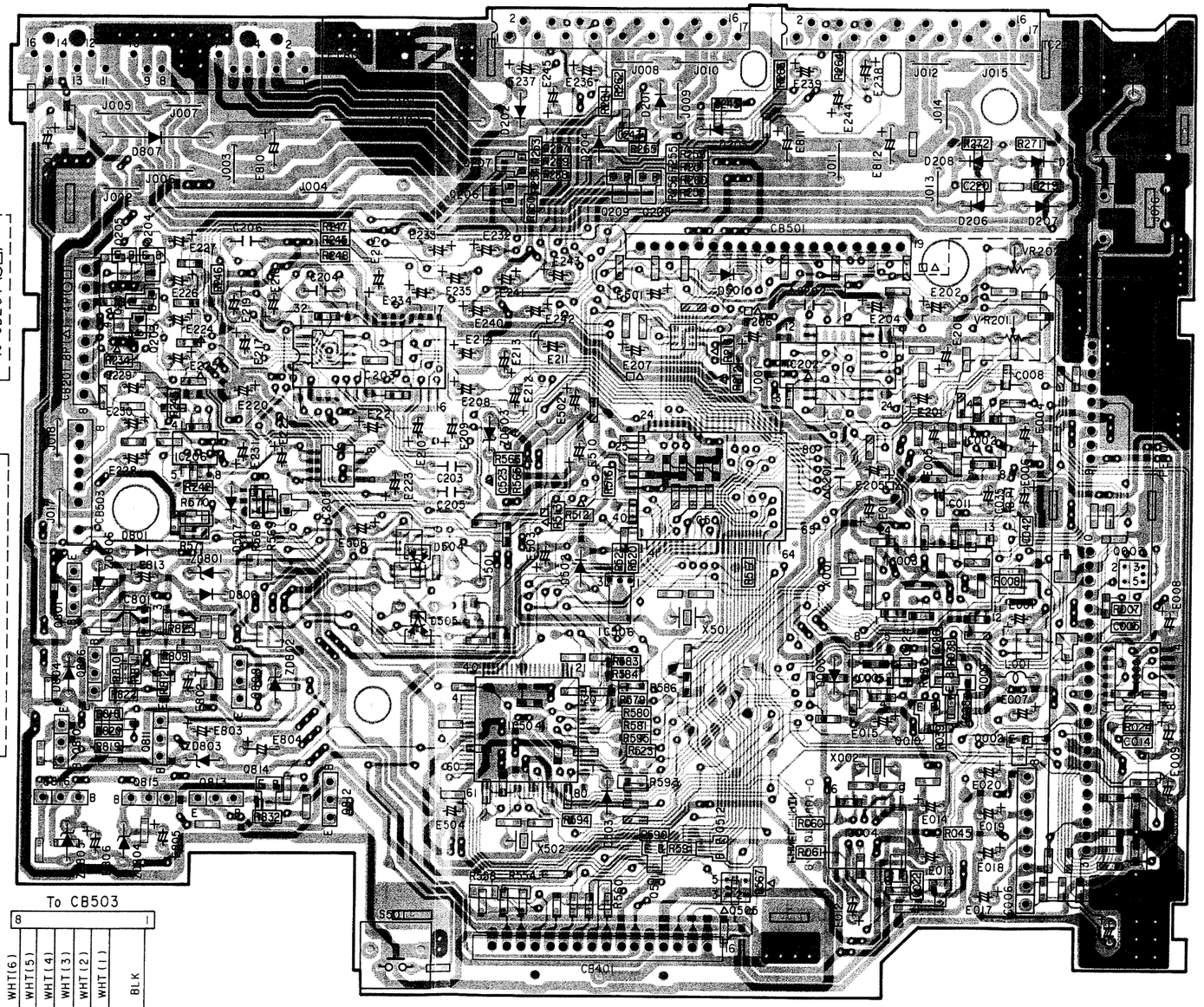

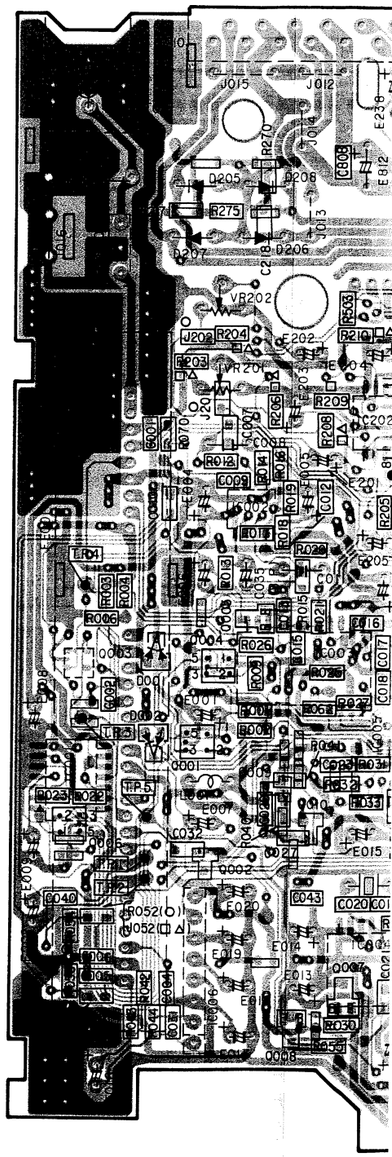

A | B | C | D | E | F | G | H

ram (1/2)

From GR Control P.C.Board
(CB1701)(○) (CB1501)(□△)

1 — 19

To CB501

Component Side View)

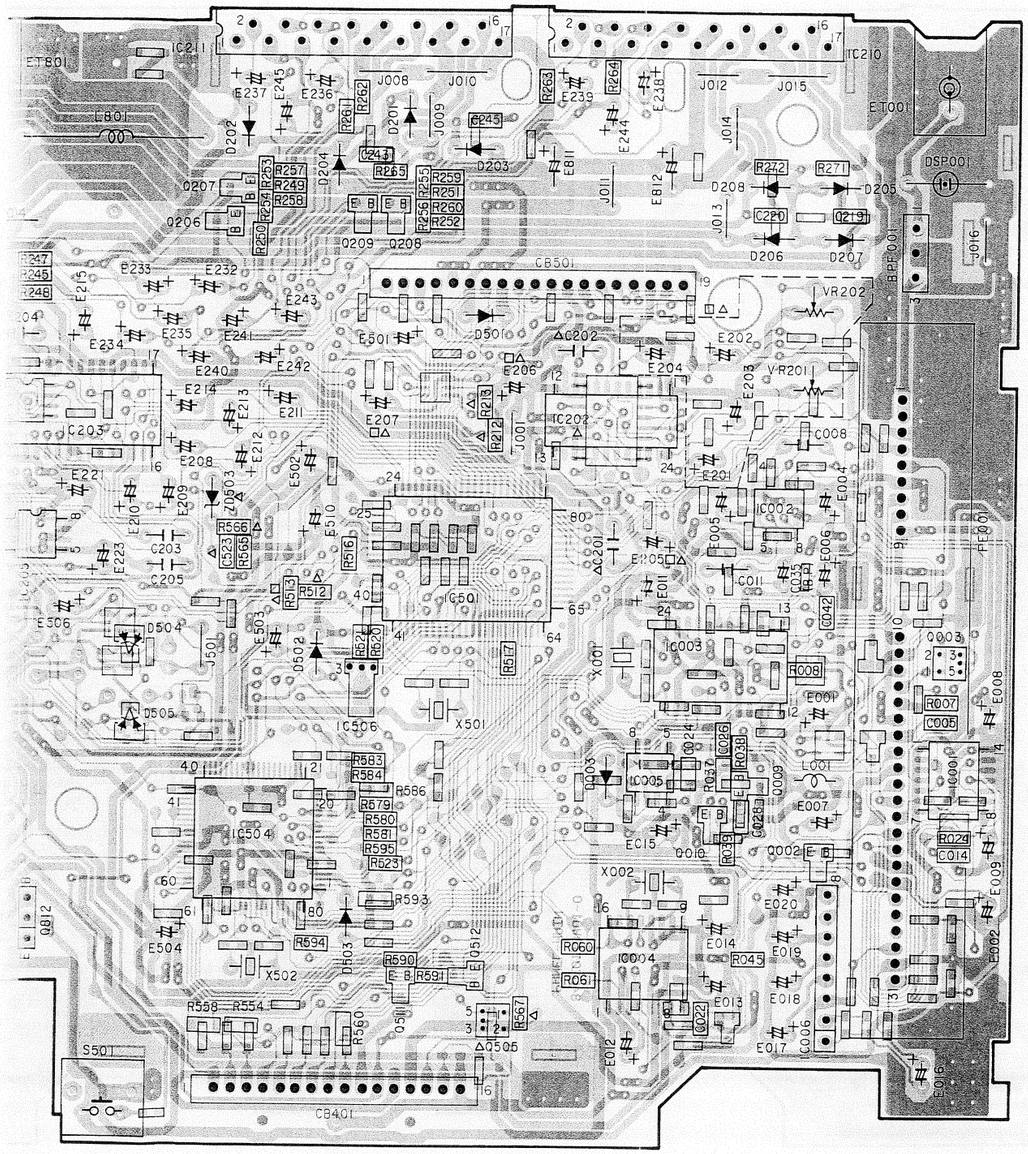

To CB401

1 — 16

From Front P.C.Board (CH401)

Main P.C.Board (Foil Side View)

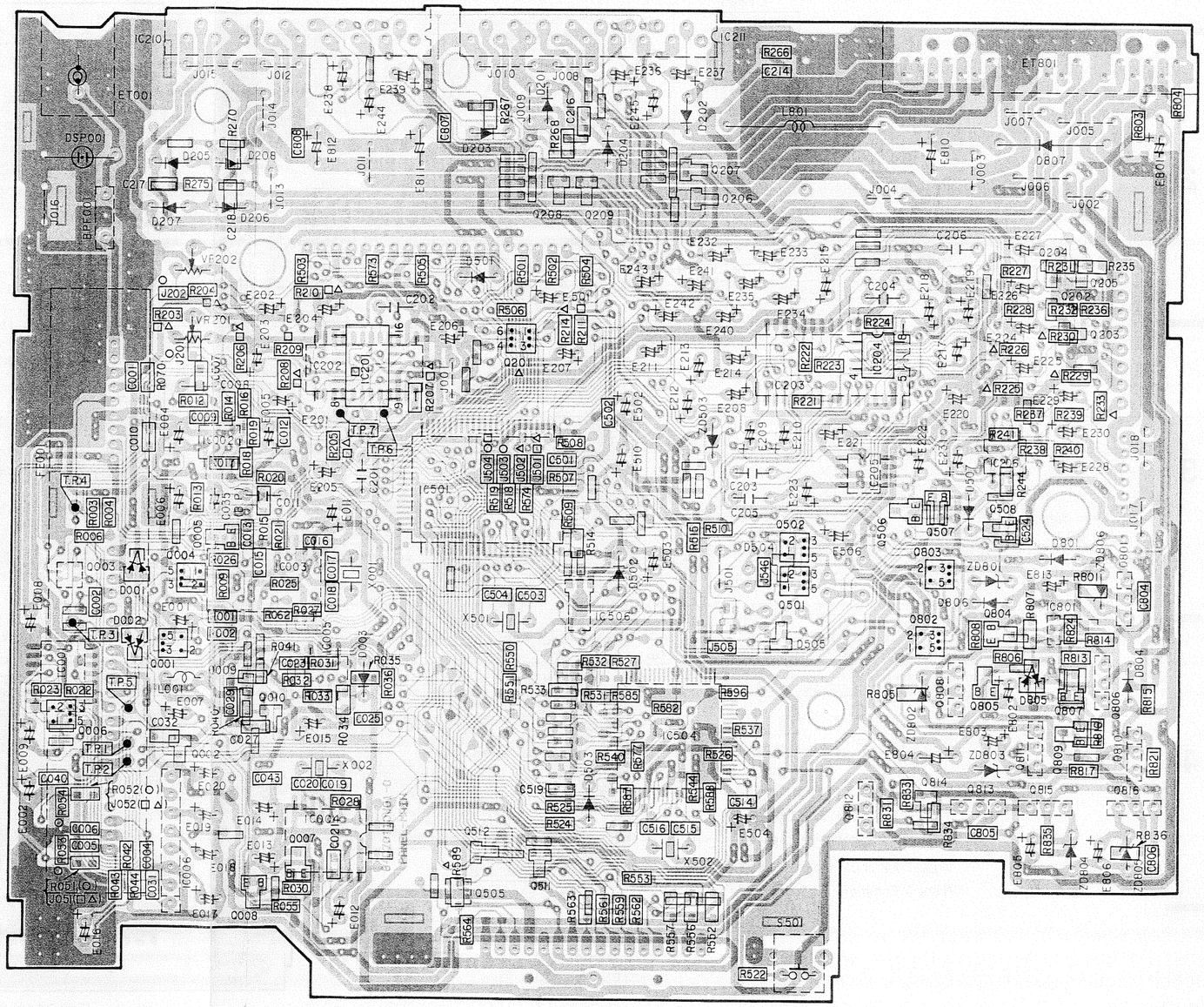

Orange Color Pattern : Component Side Pattern
Blue Color Pattern : Foil Side Pattern

D | E | F | G | H | I | J | K

ram (1/2)

From GR Control P.C.Board
(CB1701)(O) (CB1501)(□△)

1 — 19

To CB501

Component Side View)

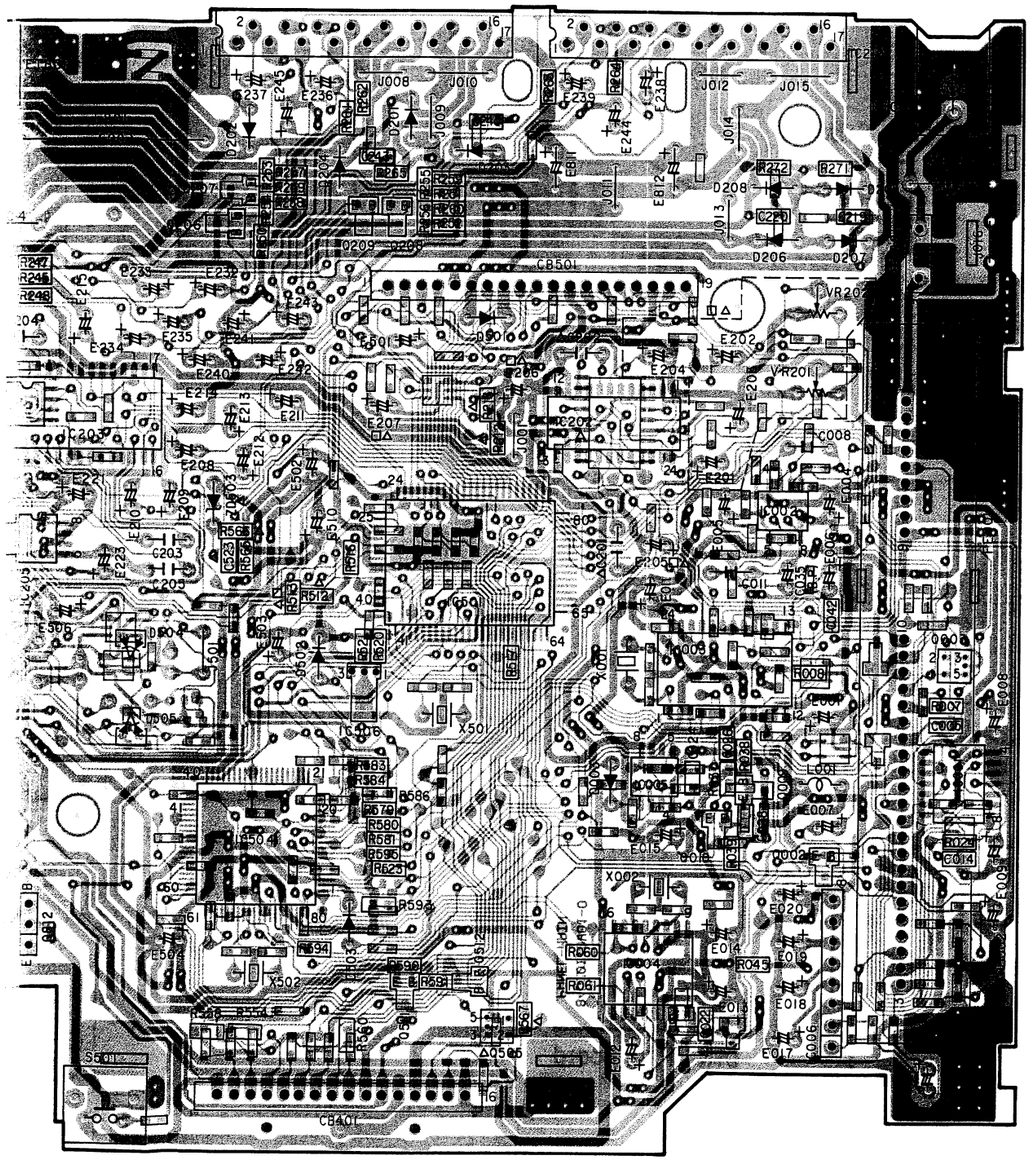

To CB401

1 — 16

From Front P.C.Board (CH401)

Main P.C.Board (Foil Side View)

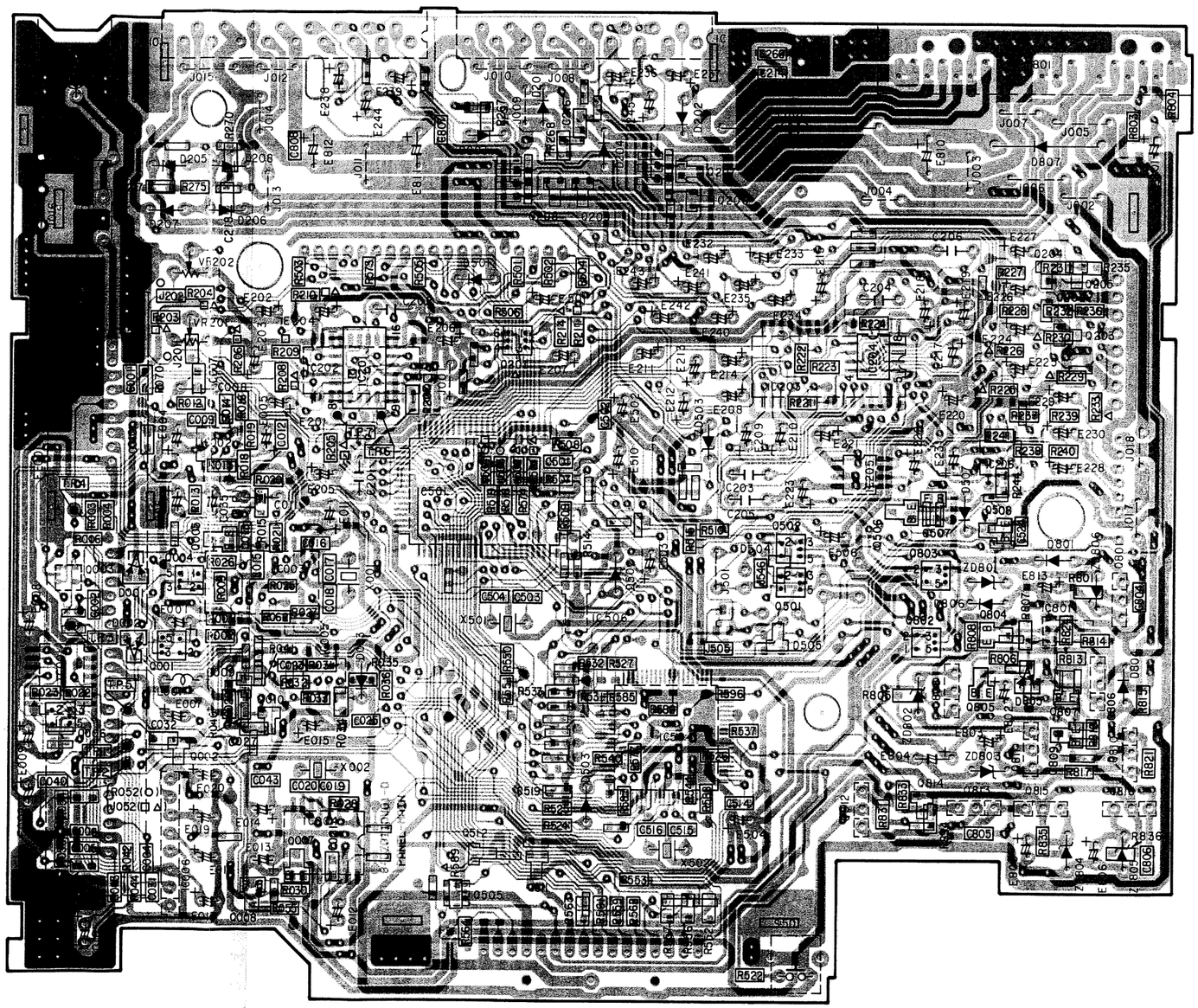

Orange Color Pattern : Component Side Pattern
Blue Color Pattern : Foil Side Pattern

D | E | F | G | H | I | J | K

Parts Layout on P.C. Boards and Wiring Diagram (2/2)

All P.C. Boards viewed from soldered side.

(O) Model Only

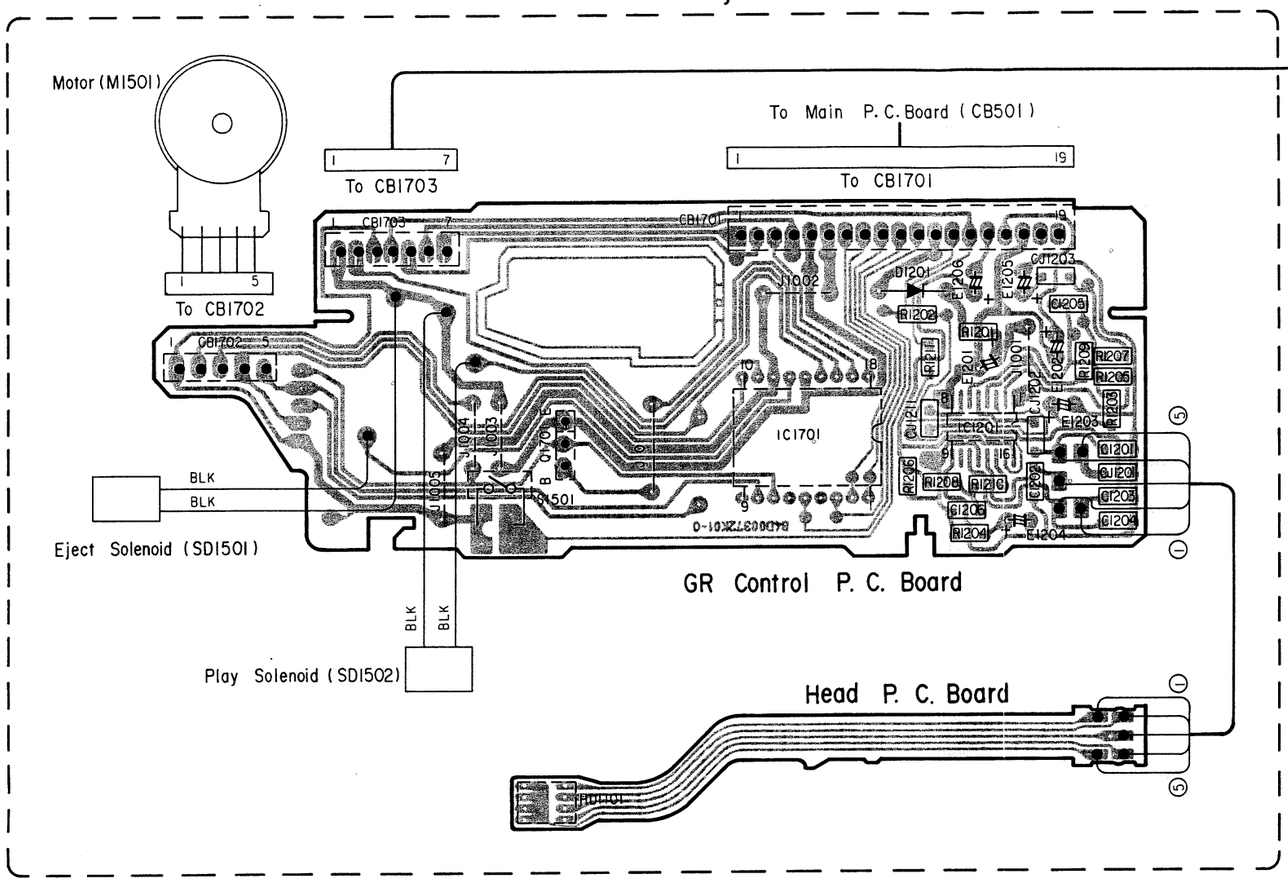

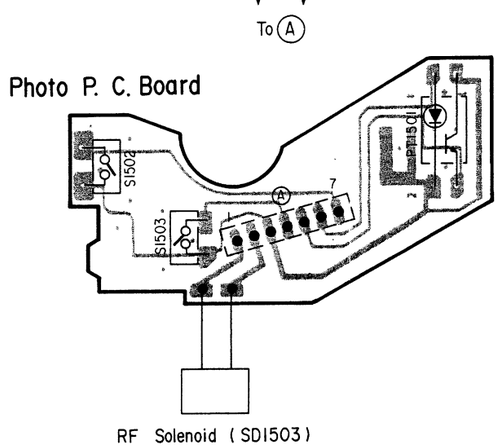

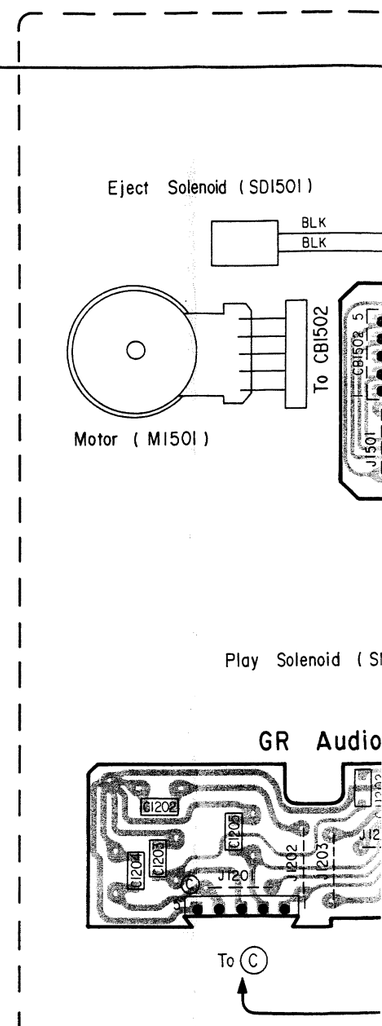

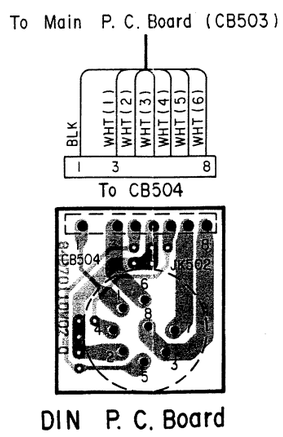

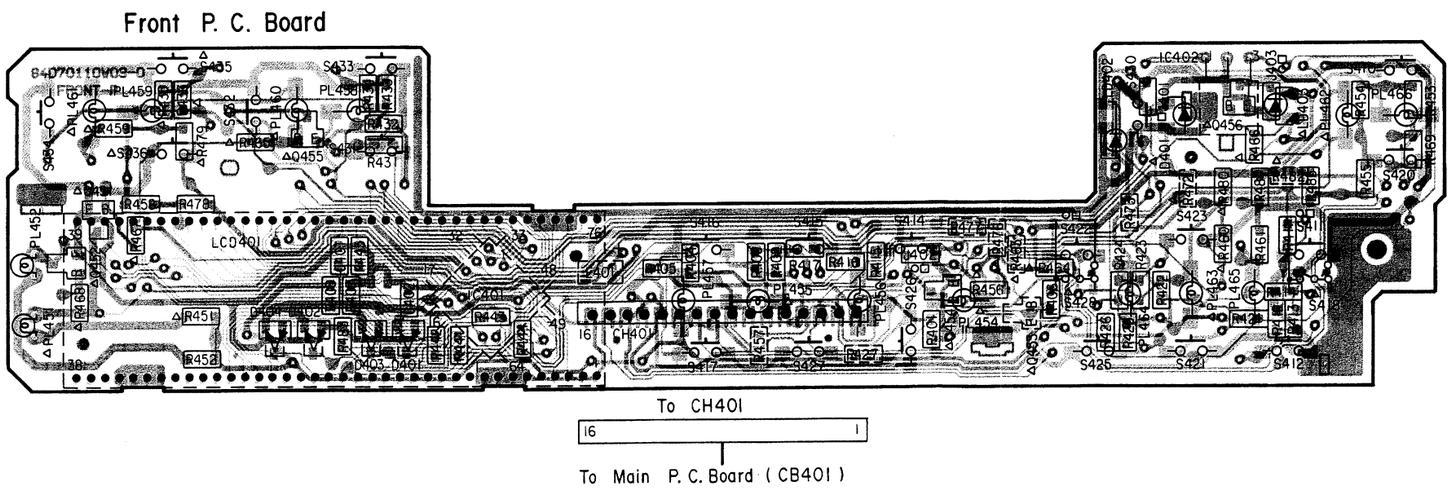

Note : ○ : For TDM-7531R Model Only,
□ : For TDM-7532R Model Only,
△ : For TDM-7535R Model Only,
Others : Common

Parts Layout on P.C. Boards and Wiring Diagram (2/2)

All P.C. Boards viewed from soldered side.

(O) Model Only

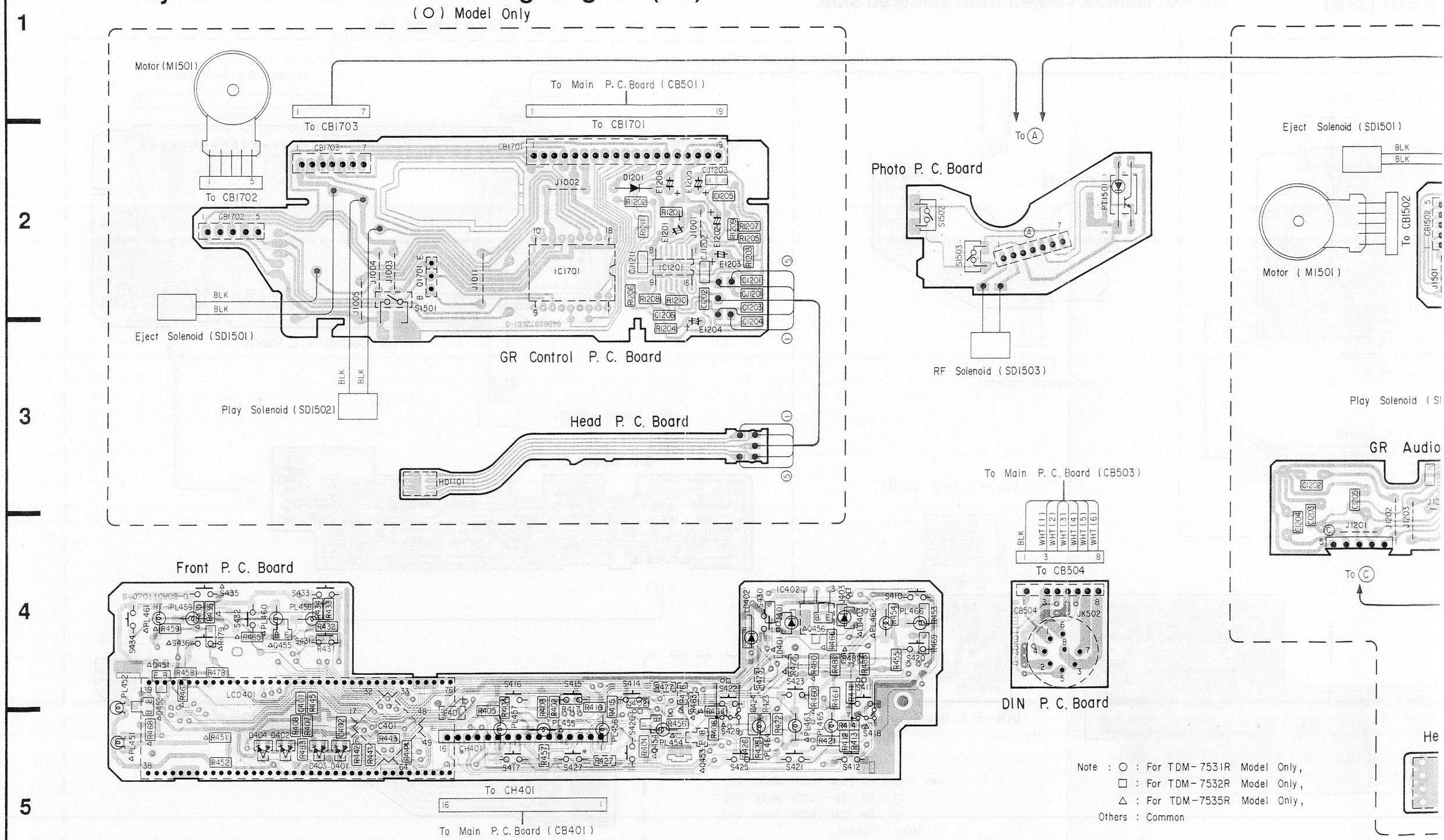

Note : ○ : For TDM-7531R Model Only,
□ : For TDM-7532R Model Only,
△ : For TDM-7535R Model Only,
Others : Common

gram (2/2)

All P.C. Boards viewed from soldered side.

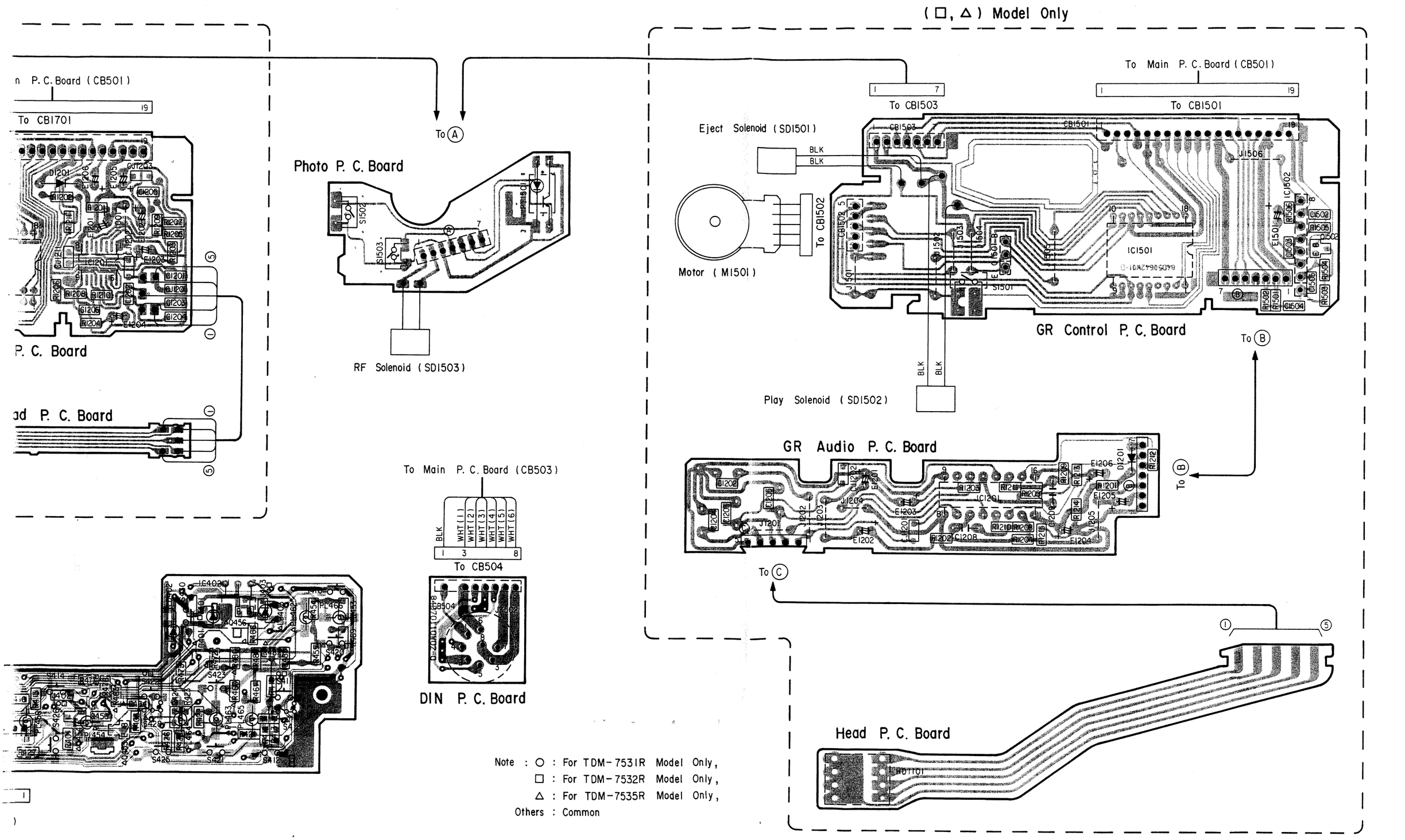

Note : ○ : For TDM-7531R Model Only,
□ : For TDM-7532R Model Only,
△ : For TDM-7535R Model Only,
Others : Common

Orange Color Pattern : Component Side Pattern
Blue Color Pattern : Foil Side Pattern

gram (2/2)

All P.C. Boards viewed from soldered side.

(□, △) Model Only

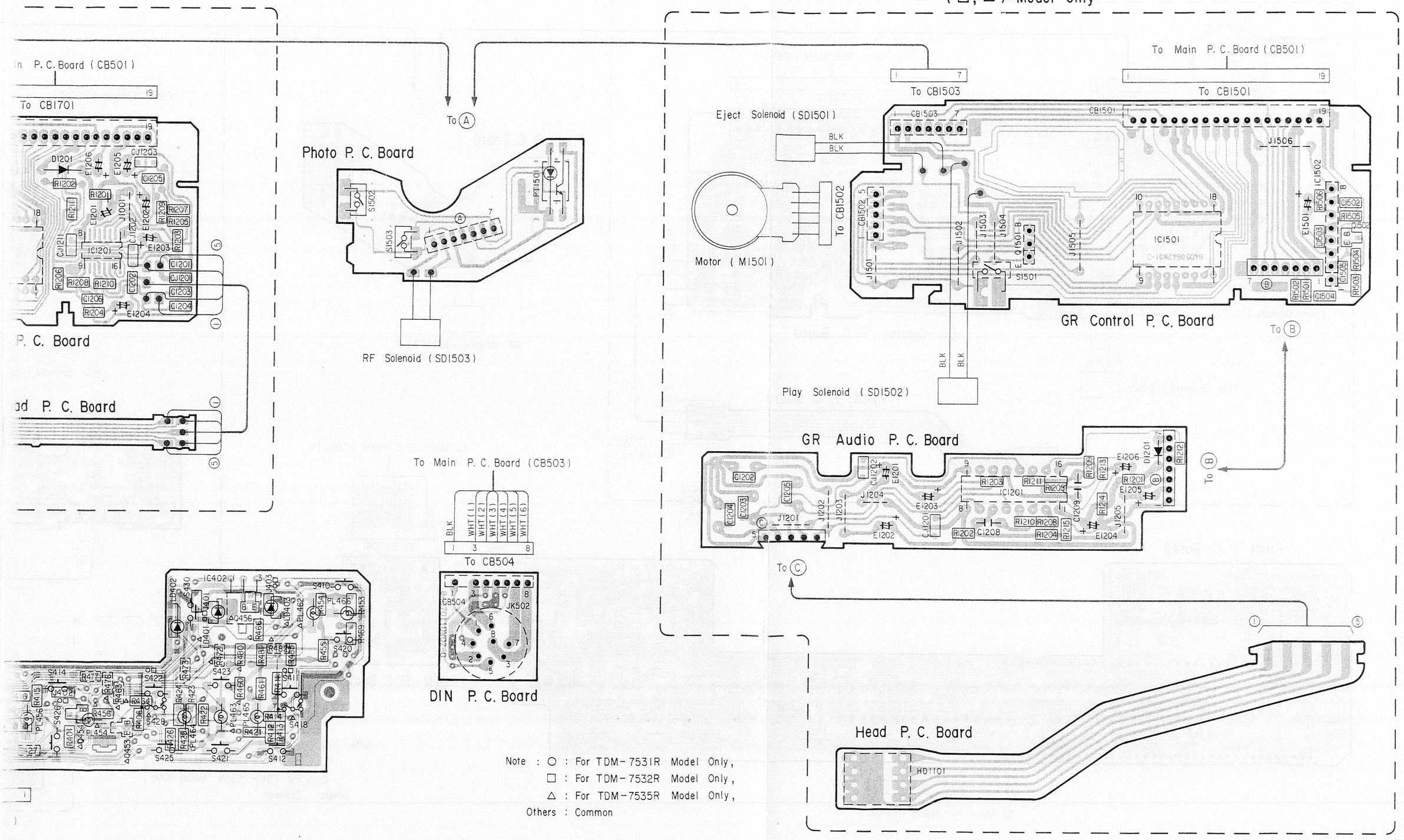

Note : ○ : For TDM-7531R Model Only,
□ : For TDM-7532R Model Only,
△ : For TDM-7535R Model Only,
Others : Common

Orange Color Pattern : Component Side Pattern
Blue Color Pattern : Foil Side Pattern

Schematic Diagram (1/3)

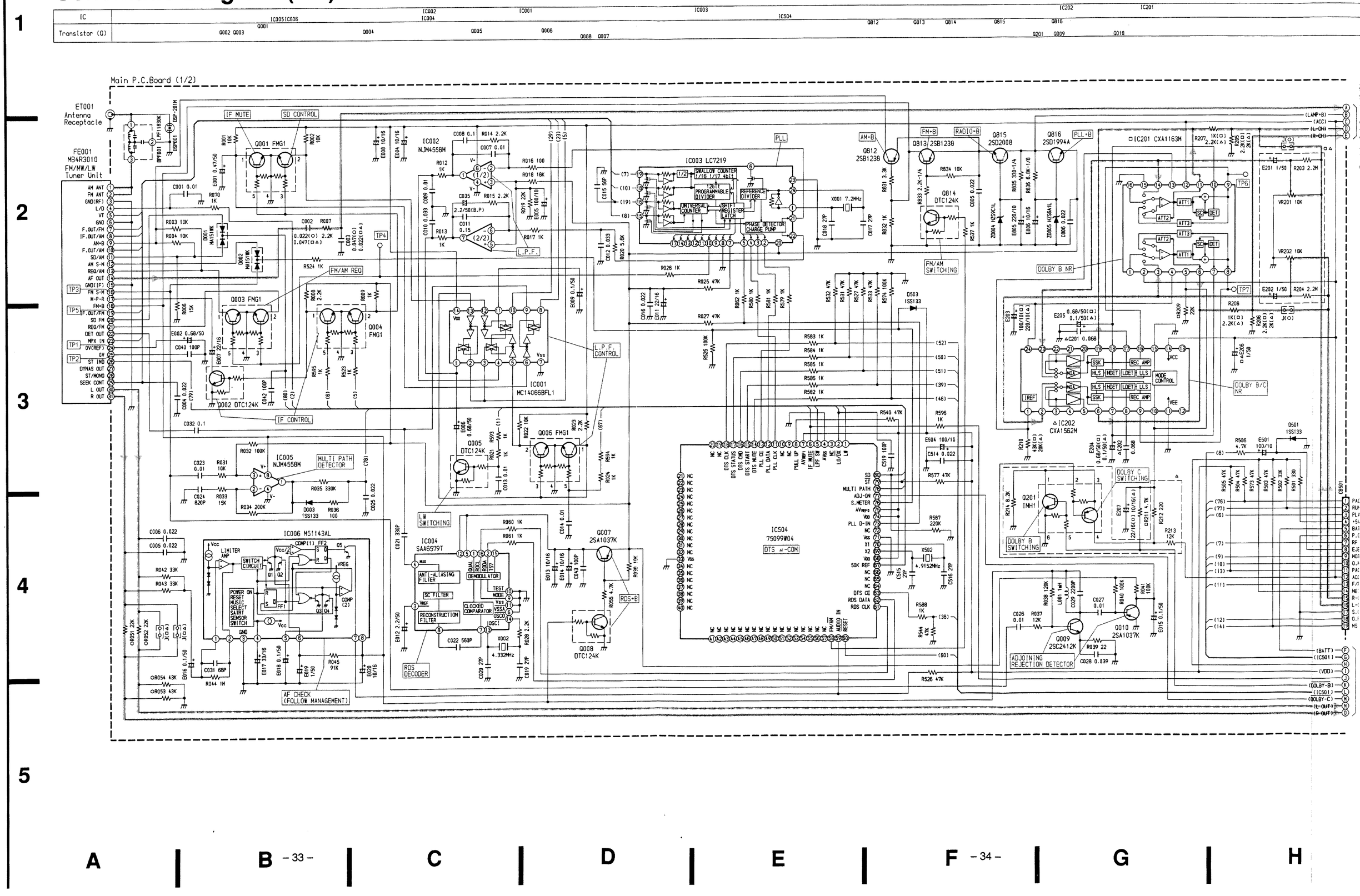

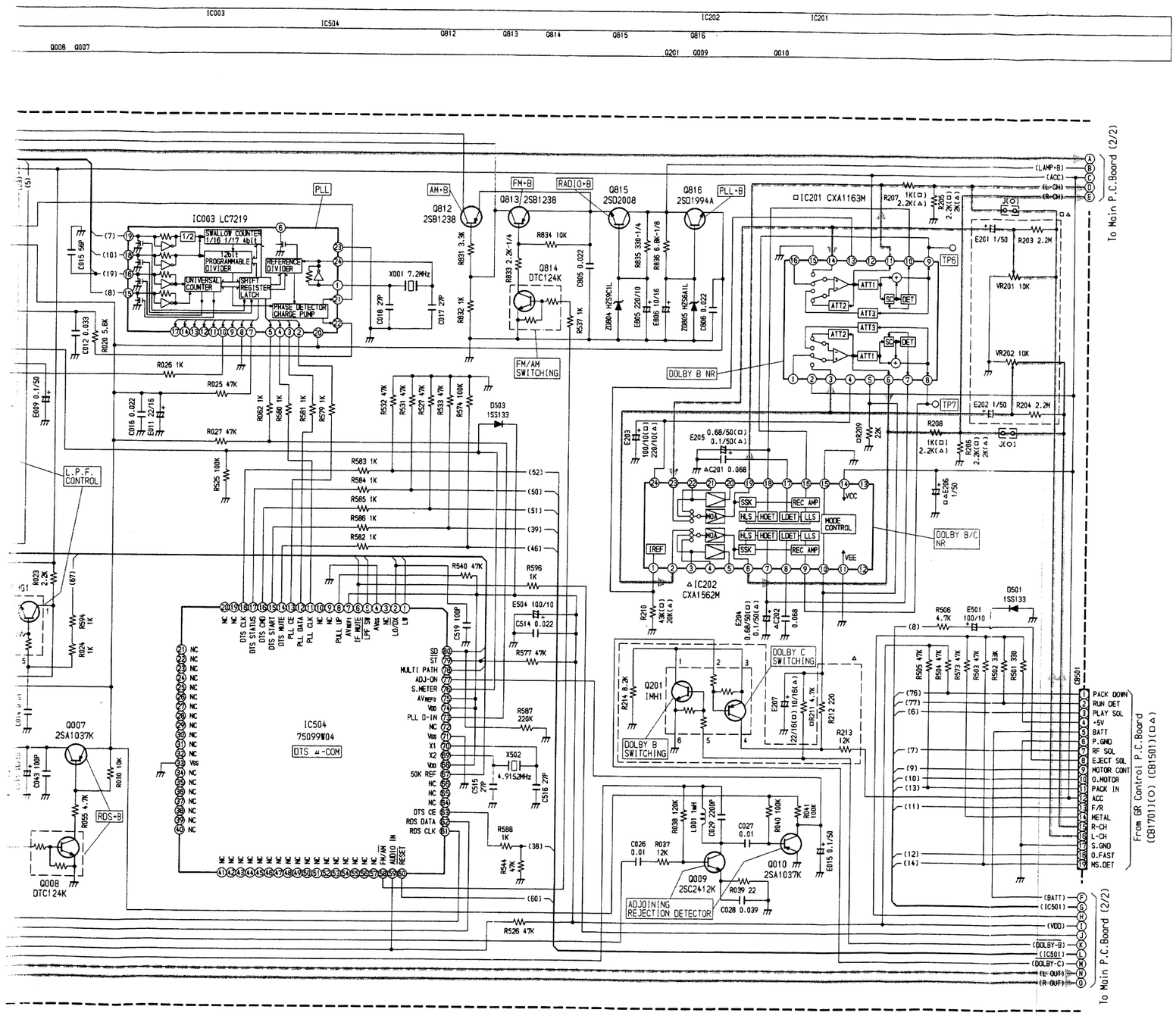

IC001

		MODE			MODE
1	2.2V/4.2V	RDS ON/OFF	8	2.4V	FM
2	4.2V	VT	9	2.4V	FM
3	4.2V	VT	10	0V/2.3V	SEEK ON/OFF
4	2.2V/5.1V	RDS ON/OFF	11	0V	FM
5	9.4V/0V	RDS ON/OFF	12	9.4V	FM
6	9.4V	FM	13	0V/8.6V	FM/AM
7	0V		14	9.4V	

IC002

		MODE
1	4.2V	FM
2	2.7V	FM
3	2.7V	FM
4	0V	
5	2.7V	FM
6	2.7V	FM
7	2.2V/4.2V	RDS ON/OFF
8	9.4V	

IC004

		MODE			MODE
1	—		9	0V	
2	5V	FM	10	0V	
3	2.4V	FM	11	0V	
4	2.4V	FM	12	4.9V	
5	4.8V		13	2.3V	X'TAL
6	0V		14	2.4V	X'TAL
7	2.4V	FM	15	—	
8	2.4V	FM	16	4.8V	FM

IC003

		MODE			MODE
1	0V	X'TAL	13	—	
2	4.9V	SEEK ON	14	—	
3	4.9V	SEEK ON	15	2.8V	MW/LW
4	4.9V	SEEK ON	16	0V	FM
5	4.7V	SEEK ON	17	—	
6	—		18	2.5V	MW/LW
7	4.8V	FM	19	2.6V	FM
8	0V		20	4.8V	
9	—		21	2.7V	FM
10	4.8V	FM	22	2.7V	FM
11	—		23	0V	
12	—		24	2.5V	X'TAL

IC005

		MODE
1	4.8V	FM
2	4.8V	FM
3	4.8V	FM
4	0V	
5	—	
6	—	
7	—	
8	9V	

IC006

		MODE
1	1.4V	FM
2	1.4V	FM
3	0V	
4	1.3V	FM
5	0V	FM
6	0V/8.9V	MOD. ON/OFF
7	0V/5V	MOD. ON/OFF
8	9V	

□IC201

		MODE
1	—	
2	9.2V	
3	SIG.	R OUT
4	4.7V	TAPE
5	3.6V/0V	DOLBY OFF/B
6	SIG.	R OUT
7	0.36V/0.56V	DOLBY OFF/B
8	4.9V	TAPE
9	4.9V	TAPE
10	0.36V/0.7V	DOLBY OFF/B
11	SIG.	L OUT
12	9.5V	
13	1.2V	TAPE
14	SIG.	L OUT
15	0V	
16	—	

△IC202

		MODE			MODE
1	1.2V	TAPE	13	—	
2	SIG.	R OUT	14	9.4V	
3	—		15	0V	
4	—		16	4.7V	TAPE
5	—		17	0.36V/0.64V/0.7V	DOLBY NR/B/C
6	SIG.	R OUT	18	0.36V/0.64V/0.7V	DOLBY NR/B/C
7	0.36V/0.64V/0.7V	DOLBY NR/B/C	19	SIG.	L OUT
8	0.36V/0.64V/0.7V	DOLBY NR/B/C	20	—	
9	4.7V	TAPE	21	—	
10	0V/4.6V/8.3V	DOLBY NR/B/C	22	—	
11	0V		23	SIG.	L IN
12	—		24	4.7V	TAPE

IC504

		MODE			MODE
1	5V	LW	63	5V	FM
2	5V/0V	LO/DX	64	—	
3	—		65	—	
4	0V		66	—	
5	5V	FM	67	5V/0V	RDS ON/OFF
6	0V	FM	68	5V	
7	5V	FM	69	PS	X'TAL
8	5V	FM	70	PS	X'TAL
9	—	FM	71	0V	
10	—	FM	72	—	
11 ~18	0V ~5V	FM	73	4.7V	SEEK ON
19 ~32	—		74	5V	
33	0V		75	5V	
34 ~57	—		76	0V	FM
58	5V/0V	FM/AM	77	5V	FM
59	5V	A-IN	78	5V	FM
60	0V/5V	RESET ON/OFF	79	0V/5V	ST/MONO
61	5V	FM	80	0V	FM
62	5V	FM			

	B	C	E	MODE
Q002	3.6V	0V	0V	FM
Q005	4.7V/0V	0V/0V	0V/0V	LW ON/OFF
Q007	4.2V	4.8V	4.9V	FM
Q008	9V	0V	0V	FM
Q009	0.9V	8.6V	0V	FM
Q010	4.8V	0V	4.8V	FM
Q812	9V/8.5V	0V/9V	9.1V/9.1V	FM/AM
Q813	8.4V/9.1V	9V/0.7V	9V/9.1V	FM/AM
Q814	4.8V/0V	0V/9V	0V/0V	FM/AM
Q815	9.5V	13.6V	9.1V	TUNER
Q816	5.5V	13.6V	4.9V	TUNER

Q001

		MODE
1	0V/9.5V	SEEK ON/OFF
2	0V/9.5V	SEEK ON/OFF
3	3V/0V	SEEK ON/OFF
4	0V	
5	3V/0V	SEEK ON/OFF

Q003

		MODE
1	7.8V/0V	REQ ON/OFF
2	1V/0V	REQ ON/OFF
3	0V/4.5V	REQ ON/OFF
4	0V	
5	0V/4.5V	REQ ON/OFF

Q004

		MODE
1	0V/4V	IF MUTE ON/OFF
2	3V/0V	SEEK ON/OFF
3	0V/5V	SEEK ON/OFF
4	0V	
5	4.2V/0V	IF MUTE ON/OFF

Q006

		MODE
1	0V/8.7V	RDS ON/OFF
2	8.8V/0V	RDS ON/OFF
3	0V/8.7V	RDS ON/OFF
4	0V	
5	4.7V/0V	RDS ON/OFF

△Q201

		MODE
1	0V/3.7V/0V	DOLBY OFF/B/C
2	4.9V/4.9V/0V	DOLBY OFF/B/C
3	0V/4.3V/8.2V	DOLBY OFF/B/C
4	5V/0V/5V	DOLBY OFF/B/C
5	0V	DOLBY OFF/B/C
6	0V	

[Measuring Conditions]

- Power Supply Voltage : DC14.4V
- Measuring Meter : Digital Multi Meter
- Measuring Point Reference : Between Ground
- Measuring Conditions : FM : 98.1MHz, 1W Output
  MW : 999kHz, 0.16W Output
  LW : 216kHz, 0.16W Output
  TAPE : MTT-212, 1W Output

Note : ○ : For TDM-7531R Model Only,
□ : For TDM-7532R Model Only,
△ : For TDM-7535R Model Only,
Others :Common.

NOTES:

1. All resistance values are in ohms. K = 1,000
2. All capacitance values are in microfarads. $P = \frac{1}{1,000,000}$

Schematic Diagram (2/3)

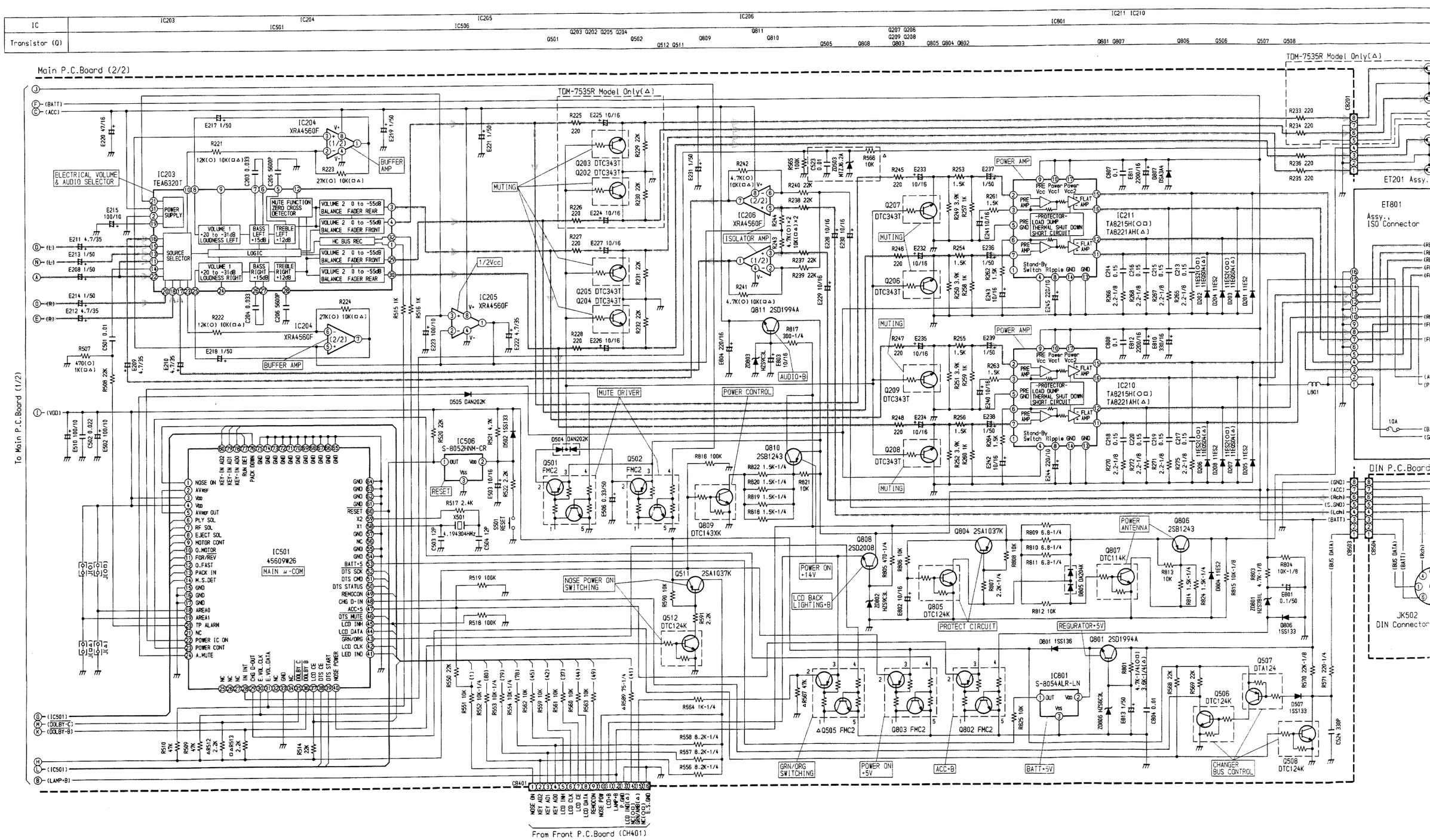

TDM-7531R/ 7532R/7535R

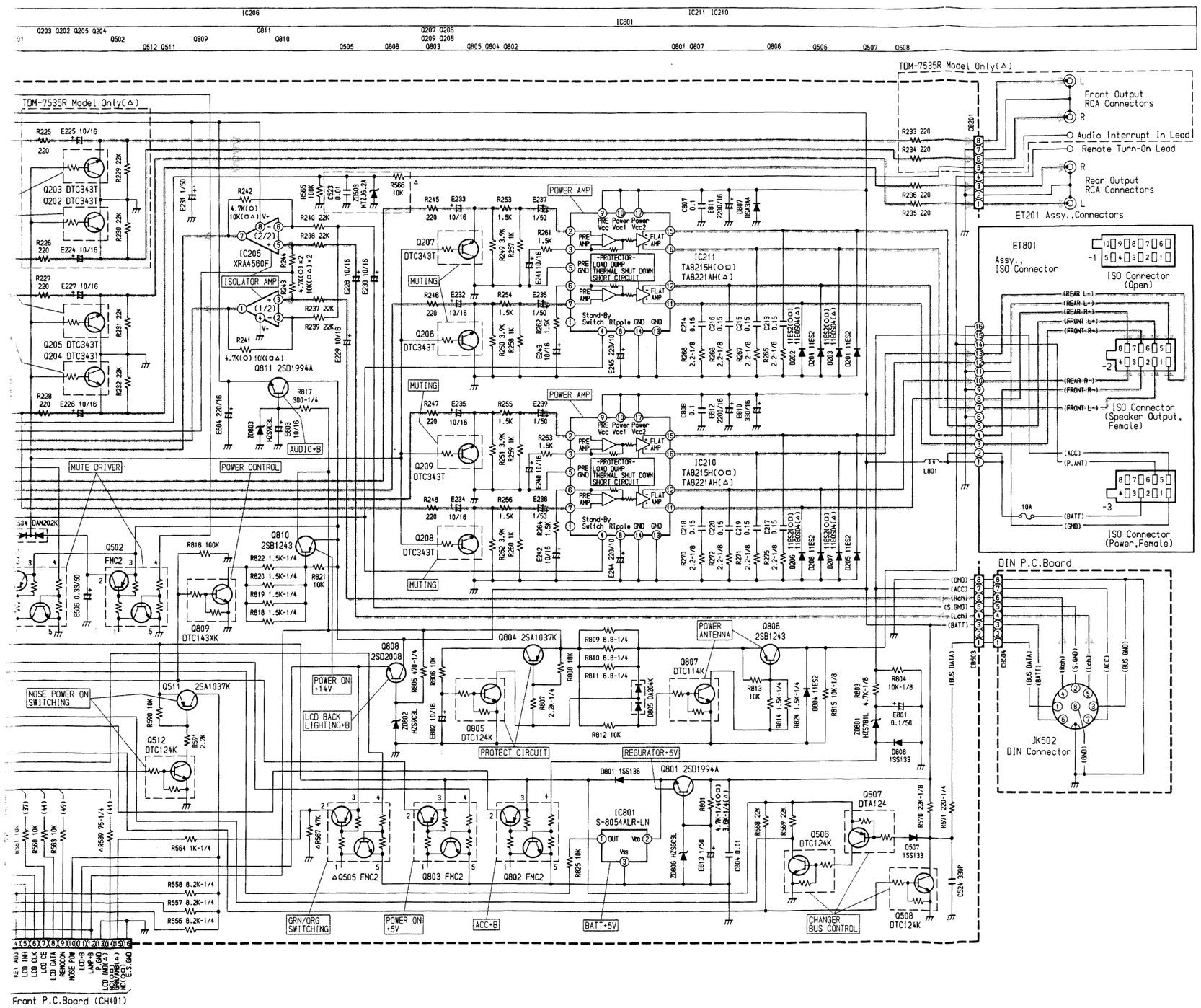

IC203

		MODE			MODE
1	4.8V	DATA	17	SIG.	CD
2	0V		18	SIG.	TAPE
3	SIG.	REAR・L	19	SIG.	FM
4	SIG.	FRONT・L	20	SIG.	FM
5	4.5V	FM	21	4.7V	FM
6	4.5V	FM	22	SIG.	MW/LW
7	4.6V	FM	23	4.7V	FM
8	4.5V	FM	24	—	
9	—		25	4.6V	FM
10	4.6V	FM	26	4.7V	FM
11	SIG.	MW/LW	27	4.7V	FM
12	—		28	4.7V	FM
13	SIG.	FM	29	SIG.	FRONT・R
14	SIG.	TP・ALM	30	SIG.	REAR・R
15	SIG.	TAPE	31	9.3V	
16	SIG.	CD	32	4.8V	CLK

IC204

		MODE
1	4.7V	FM
2	4.7V	FM
3	4.7V	FM
4	0V	
5	4.7V	FM
6	4.7V	FM
7	4.7V	FM
8	9.4V	

IC205

		MODE
1	4.7V	FM
2	4.7V	FM
3	4.7V	FM
4	0V	
5	—	
6	—	
7	—	
8	9.4V	

IC210, IC211

		MODE
1	—	
2	SIG.	L IN
3	5.1V	FM
4	5V	STBY
5	0V	
6	5.1V	FM
7	SIG.	R IN
8	5.2V	FM
9	13.8V	FM
10	13.8V	FM
11	SIG.	R OUT
12	SIG.	R OUT
13	0V	
14	0V	
15	SIG.	L OUT
16	SIG.	L OUT
17	13.8V	

IC206

		MODE			MODE
1	SIG.	CD	5	SIG.	CD
2	SIG.	CD	6	SIG.	CD
3	SIG.	CD	7	SIG.	CD
4	0V		8	9.4V	

IC501

		MODE			MODE			MODE			MODE
1	2.5V/5V	NOSE ON/OFF	21	—		41	5V/0V	SW ON/OFF	61	0V	
2	4.8V		22	5V/0V	POW ON/OFF	42	5V	LCD CLK	62	0V	
3	4.9V		23	5V/0V	POW ON/OFF	43	0V/5V	GRN/ORG	63	0V	
4	4.9V		24	5V/0V	MUTE ON/OFF	44	5V	LCD DATA	64	0V	
5	4.8V		25	—		45	5V	LCD INH	65	0V	
6	4.9V	TAPE	26	—		46	5V	DTS MUTE	66	0V	
7	4.9V	EJECT	27	—		47	5V	ACC+B	67	0V	
8	4.9V	EJECT	28	5.7V/0V	IN-INT ON/OFF	48	0V	CHANG IN	68	0V	
9	5V	TAPE	29	0V	CHANG OUT	49	5V	REMOCON	69	0V	
10	5V	TAPE	30	5V	EV-CLK	50	5V	DTS STS	70	0V	
11	5V/0V	FOW/REV	31	5V	EV-DATA	51	0V	DTS CMD	71	0V	
12	0V/5V	PLAY/FF・REV	32	—		52	5V	DTS SCK	72	0V	
13	5V	PACK IN	33	0V		53	5V	BATT+5	73	0V	
14	5V	M.S.	34	—		54	0V		74	0V	
15	0V		35	0V	DOLBY-C	55	0V	FM	75	0V	
16	0V		36	0V	DOLBY-B	56	—		76	5V	TAPE
17	0V		37	5V	LCD CE	57	0V		77	2.5V	FF
18	0V		38	5V	DTS CE	58	PS	X'TAL	78	5V	
19	0V		39	5V	DTS. START	59	PS	X'TAL	79	5V	
20	5V	TP. OFF ALM	40	5V	NOSE POW	60	0V/5V	RESET ON/OFF	80	5V	

Q501

		MODE
1	—	
2	13.8V/0V	MUTE ON/OFF
3	13.8V	MUTE ON/OFF
4	5V/0V	MUTE ON/OFF
5	0V	

Q502

		MODE
1	—	
2	13.8V/0V	IF MUTE ON/OFF
3	13.8V/13.8V	IF MUTE ON/OFF
4	5V/0V	IF MUTE ON/OFF
5	0V	

△Q505

		MODE
1	—	
2	0V/9.1V	GRN/ORG
3	9.2V/9.2V	GRN/ORG
4	0V/5V	GRN/ORG
5	0V	

[Measuring Conditions]

- Power Supply Voltage : DC14.4V
- Measuring Meter : Digital Multi Meter
- Measuring Point Reference : Between Ground
- Measuring Conditions : FM : 98.1MHz, 1W Output
  MW : 999kHz, 0.16W Output
  LW : 216kHz, 0.16W Output
  TAPE : MTT-212, 1W Output

IC506

		MODE
1	5V/0V	RESET OFF/ON
2	5V/1.7V	RESET OFF/ON
3	0V	

Q802

		MODE
1	—	
2	5V/0V	ACC ON/OFF
3	5V/5.4V	ACC ON/OFF
4	6V/0V	ACC ON/OFF
5	0V	

Q803

		MODE
1	—	
2	5V/0V	POW ON/OFF
3	5V/5V	POW ON/OFF
4	5V/0V	POW ON/OFF
5	0V	

IC801

		MODE
1	5V	FM
2	5V	FM
3	0V	

Note : ○ : For TDM-7531R Model Only,
□ : For TDM-7532R Model Only,
△ : For TDM-7535R Model Only,
Others :Common.

	B	C	E	MODE		B	C	E	MODE
△Q202	0V/13.8V	0V/0V	0V/0V	MUTE ON/OFF	Q511	4.8V	5V	5V	
△Q203	0V/13.8V	0V/0V	0V/0V	MUTE ON/OFF	Q512	4.8V	0V	0V	
Q204	0V/13.8V	0V/0V	0V/0V	MUTE ON/OFF	Q801	6.3V	13.8V	5.6V	
Q205	0V/13.8V	0V/0V	0V/0V	MUTE ON/OFF	Q804	13.7V	0V	13.7V	POW ON
Q206	0V/13.8V	0V/0V	0V/0V	MUTE ON/OFF	Q805	0V	13.6V	0V	POW ON
Q207	0V/13.8V	0V/0V	0V/0V	MUTE ON/OFF	Q806	13V	13.6V	13.6V	POW ON
Q208	0V/13.8V	0V/0V	0V/0V	MUTE ON/OFF	Q807	0V	7V	0V	POW ON
Q209	0V/13.8V	0V/0V	0V/0V	MUTE ON/OFF	Q808	9.8V	13.8V	9.2V	POW ON
Q506	PS	4.9V	0V	CHANG IN	Q809	4.1V	0V	0V	POW ON
Q507	PS	0V	5V	CHANG IN	Q810	13V	13.6V	13.7V	POW ON
Q508	PS	0V	0V	CHANG IN	Q811	10V	13.8V	9.5V	POW ON

NOTES:

1. All resistance values are in ohms. K = 1,000
2. All capacitance values are in microfarads. $P = \frac{1}{1{,}000{,}000}$

Schematic Diagram (3/3)

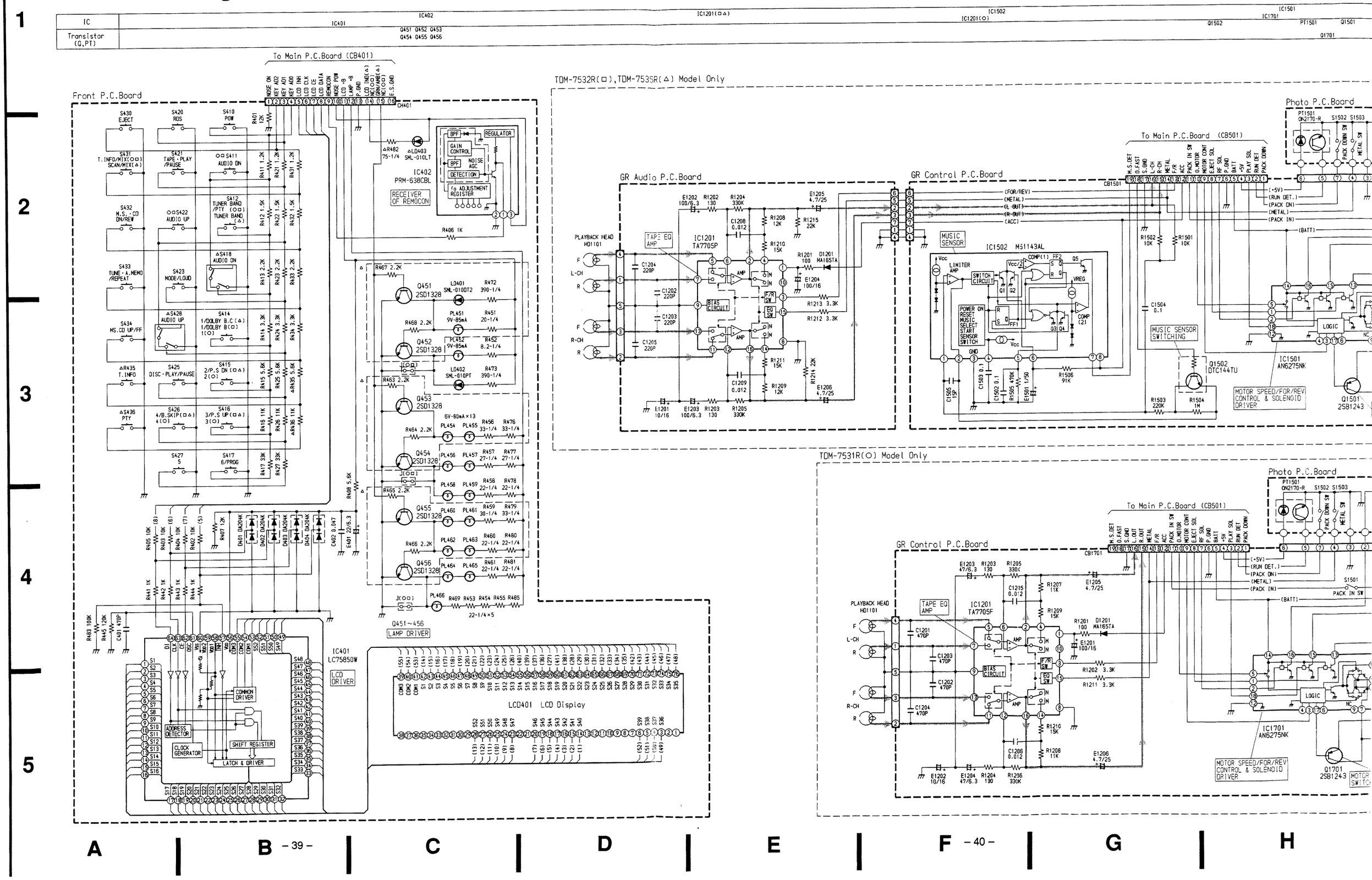

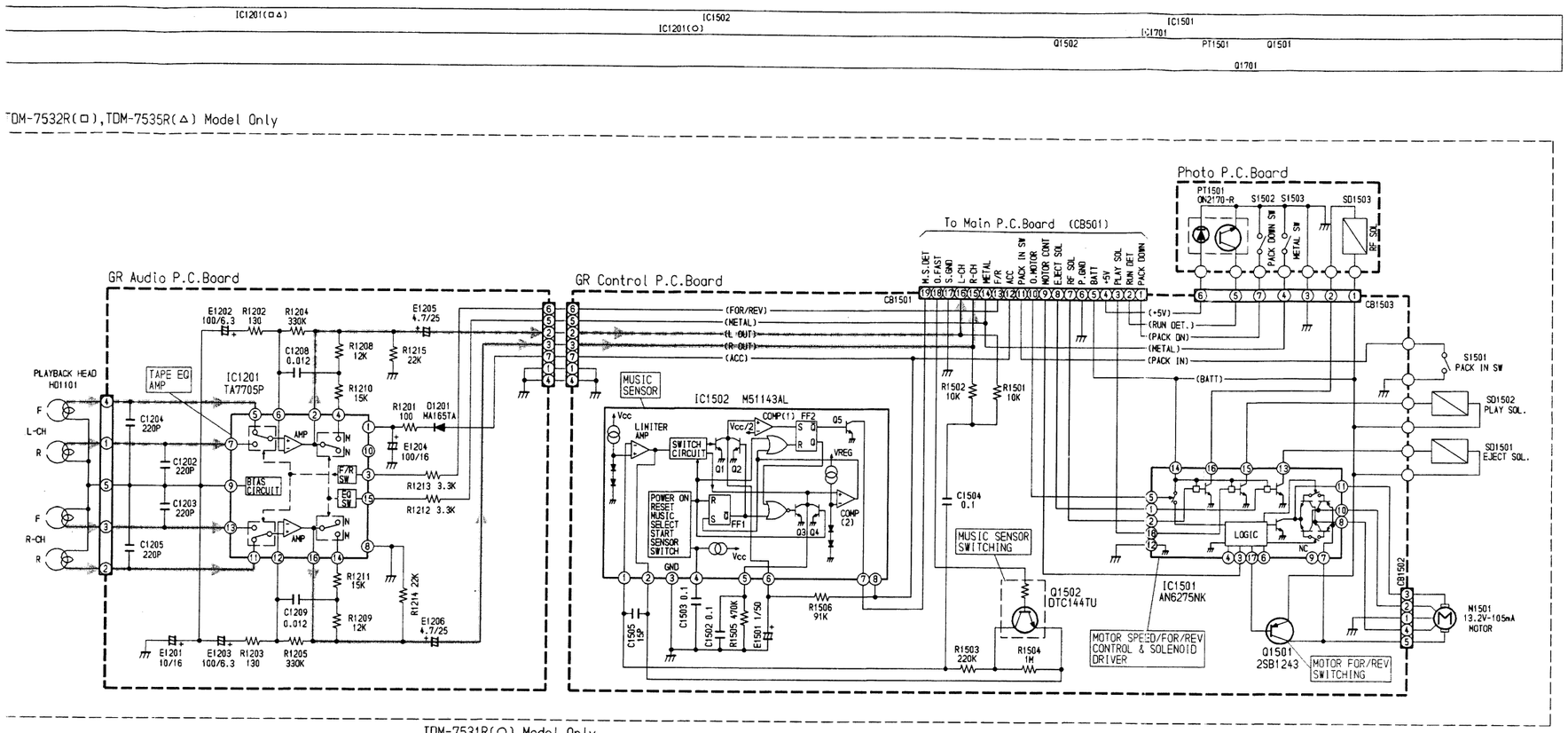

TDM-7532R(□),TDM-7535R(△) Model Only

TDM-7531R(○) Model Only

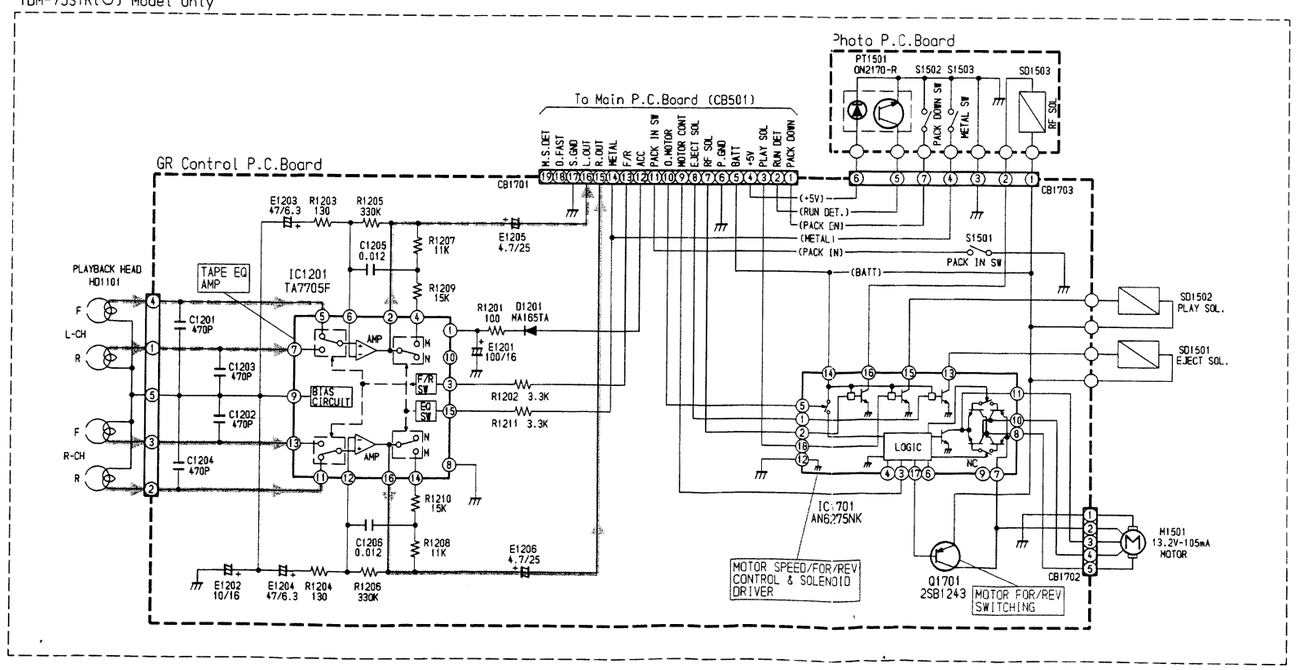

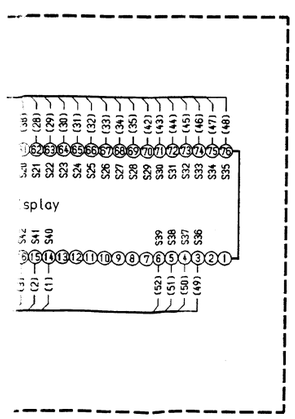

IC401

		MODE
1~55	PS	
56	5.5V	
57	0V~5V	IMH
58	—	
59	—	
60	0V	
61	PS	OSC
62	0V~5V	CE
63	0V~5V	CLK
64	0V~5V	DATA

IC402

1	0V~5V
2	0V
3	5V

□△IC1201

1	13.1V	9	2.9V
2	3.1V	10	—
3	4.9V	11	2.9V
4	3.1V	12	2.9V
5	2.9V	13	2.9V
6	2.9V	14	3.1V
7	2.9V	15	0.1V
8	0V	16	3.1V

○IC1201

1	10.8V	9	2.9V
2	3V	10	—
3	5.1V	11	2.9V
4	3V	12	2.9V
5	2.9V	13	2.9V
6	2.9V	14	3V
7	2.9V	15	0V
8	0V	16	3V

□△IC1501

1	0V	10	13.9V
2	0V	11	8.1V
3	5.1V	12	0V
4	—	13	14V
5	5.1V	14	14V
6	—	15	0.2V
7	13.9V	16	14V
8	8.2V	17	13.2V
9	—	18	5.1V

□△IC1502

1	1.41V
2	1.38V
3	0V
4	1.31V
5	0.02V
6	0.02V
7	0.05V
8	14.01V

○IC1701

1	0V	10	11.9V
2	0V	11	5.7V
3	5.1V	12	0V
4	—	13	12V
5	5.1V	14	12V
6	—	15	0.2V
7	11.9V	16	12V
8	5.7V	17	11.3V
9	—	18	5.1V

	B	C	E	MODE
△Q451	0V/4.3V	9.2V/0V	0V/0V	GRN/ORG
△Q452	9.1V/0V	0V/9.2V	0V/0V	GRN/ORG
△Q453	0V/4.3V	13.8V/0V	0V/0V	GRN/ORG
△Q454	13.7V/0V	0V/13.8V	0V/0V	GRN/ORG
△Q455	0V/4.3V	13.8V/0V	0V/0V	GRN/ORG
△Q456	13.7V/0V	0V/13.8V	0V/0V	GRN/ORG
□△Q1501	13.6V	13.8V	14V	
□△Q1502	3.8V	0.4V	0V	
○Q1701	11.3V	11.9V	12V	

[Measuring Conditions]

- Power Supply Voltage : DC14.4V
- Measuring Meter : Digital Multi Meter
- Measuring Point Reference : Between Ground
- Measuring Conditions : FM : 98.1MHz, 1W Output
  MW : 999kHz, 0.16W Output
  LW : 216kHz, 0.16W Output
  TAPE : MTT-212, 1W Output

Note : ○ : For TDM-7531R Model Only,
□ : For TDM-7532R Model Only,
△ : For TDM-7535R Model Only,
Others :Common.

NOTES:

1. All resistance values are in ohms. K = 1,000
2. All capacitance values are in microfarads. $P = \frac{1}{1,000,000}$

Electrical Parts List

Resistor : Carbon resistors under 1 / 4 watts are not mentioned in the parts list, please confirm them by schematic diagram.
Capacitor : μF = microfarads, pF = picofarads

Abbreviations

RES. =	Resistor	CAP. =	Capacitor
C.F. =	Carbon Film	ELY. =	Electrolytic
M.F. =	Metal Film	CER. =	Ceramic
M.O. =	Metal Oxide Film	MYL. =	Mylar
M.P. =	Metal Plate	TAN. =	Tantalum
TR. =	Transistor	POLY. =	Polystyrol
TRANS. =	Transformer	PP. =	Polypropylene
CP. =	Chip	PLT. =	Polyethylene
		PF. =	Polyester Film

Main P. C. Board

IC's

	Symbol No.	Part No.	Description
	IC001	51T40941U03	MC14066BFL1
	IC002	51T93336F01	NJM4558M
	IC003	51T35504W02	LC7219
	IC004	51T55054W02	SAA6579T
	IC005	51T93336F01	NJM4558M
	IC006	51T67915F01	M51143AL
□	IC201	51T16466W02	CXA1163M
△	IC202	51T65314W01	CXA1562M
	IC203	51T65131W01	TEA6320T
	IC204	51T92001F21	XRA4560F
	IC205	51T92001F21	XRA4560F
	IC206	51T92001F21	XRA4560F
○	IC210	51T35133W02	TA8215H
○	or	51T65310W01	MC13309T3
□	IC210	51T35133W02	TA8215H
□	or	51T65310W01	MC13309T3
△	IC210	51T25614W11	TA8221AH
○	IC211	51T35133W02	TA8215H
○	or	51T65310W01	MC13309T3
□	IC211	51T35133W02	TA8215H
□	or	51T65310W01	MC13309T3
△	IC211	51T25614W11	TA8221AH
	IC501	51T45609W26	45609W26
	IC504	51T75099W04	75099W04
	IC506	51T95014F13	S-8052HNM-CR
	IC801	51T95014F09	S-8054ALR-LN

Transistors

	Symbol No.	Part No.	Description
	Q001	48T73888F08	CP., FMG1
	Q002	48T62967F03	CP., DTC124K
	Q003	48T73888F08	CP., FMG1
	Q004	48T73888F08	CP., FMG1
	Q005	48T62967F03	CP., DTC124K
	Q006	48T73888F08	CP., FMG1
	Q007	48T63420F01	CP., 2SA1037K
	Q008	48T62967F03	CP., DTC124K
	Q009	48T63417F01	CP., 2SC2412K
	Q010	48T63420F01	CP., 2SA1037K
△	Q201	48T94471F03	CP., IMH1
△	Q202	48T62967F33	CP., DTC343T
△	Q203	48T62967F33	CP., DTC343T
	Q204	48T62967F33	CP., DTC343T
	Q205	48T62967F33	CP., DTC343T
	Q206	48T62967F33	CP., DTC343T
	Q207	48T62967F33	CP., DTC343T
	Q208	48T62967F33	CP., DTC343T
	Q209	48T62967F33	CP., DTC343T
	Q501	48T73888F12	CP., FMC2
	Q502	48T73888F12	CP., FMC2
△	Q505	48T73888F12	CP., FMC2
	Q506	48T62967F03	CP., DTC124K
	Q507	48T62966F03	CP., DTA124
	Q508	48T62967F03	CP., DTC124K
	Q511	48T63420F01	CP., 2SA1037K
	Q512	48T62967F03	CP., DTC124K
	Q801	48T93828F04	2SD1994A
	Q802	48T73888F12	CP., FMC2
	Q803	48T73888F12	CP., FMC2
	Q804	48T63420F01	CP., 2SA1037K
	Q805	48T62967F03	CP., DTC124K
	Q806	48T84366F01	2SB1243
	Q807	48T62967F02	CP., DTC114K
	Q808	48T15289W03	2SD2008
	Q809	48T62967F05	CP., DTC143XK
	Q810	48T84366F01	2SB1243
	Q811	48T93828F04	2SD1994A
	Q812	48T84234F03	2SB1238
	Q813	48T84234F03	2SB1238
	Q814	48T62967F03	CP., DTC124K
	Q815	48T15289W03	2SD2008
	Q816	48T93828F04	2SD1994A

Diodes / Surge Protector

	Symbol No.	Part No.	Description
	D001	48T52446F01	CP., MA151WK
	D002	48T52446F01	CP., MA151WK
	D003	48T68828F11	1SS133
	D201	48T84052F11	11ES2
○	D202	48T84052F11	11ES2
□	D202	48T84052F11	11ES2
△	D202	48T55247W02	11EQS04
○	D203	48T84052F11	11ES2
□	D203	48T84052F11	11ES2
△	D203	48T55247W02	11EQS04
	D204	48T84052F11	11ES2
	D205	48T84052F11	11ES2
○	D206	48T84052F11	11ES2
□	D206	48T84052F11	11ES2
△	D206	48T55247W02	11EQS04
○	D207	48T84052F11	11ES2
□	D207	48T84052F11	11ES2
△	D207	48T55247W02	11EQS04
	D208	48T84052F11	11ES2
	D501	48T68828F11	1SS133
	D502	48T68828F11	1SS133
	D503	48T68828F11	1SS133
	D504	48T63462F01	CP., DAN202K
	D505	48T63462F01	CP., DAN202K
	D507	48T68828F11	1SS133
	D801	48T70933F11	1SS136
	D804	48T84052F11	11ES2
	D805	48T64134F01	CP., DA204K
	D806	48T68828F11	1SS133
	D807	48T68580F03	DSA3A4
△	ZD503	48T45012W29	Zener, MTZJ6.2A
	ZD801	48T25766W13	Zener, HZS7B1L
	ZD802	48T25766W26	Zener, HZS9C3L
	ZD803	48T25766W26	Zener, HZS9C3L
	ZD804	48T25766W24	Zener, HZS9C1L
	ZD805	48T25766W01	Zener, HZS6A1L
	ZD806	48T25766W09	Zener, HZS6C3L
	DSP001	48T81909F01	DSP-201M

Crystals

Symbol No.	Part No.	Description
X001	91T45118W43	7.2MHz
X002	91T45118W18	4.332MHz
X501	91T45118W17	4.194304MHz
X502	91T45118W27	4.9152MHz

Filter / Coils

Symbol No.	Part No.	Description
BPF001	91T75257W01	Filter, LPF11830K
L001	24T25798W13	Inductor, 1mH
L801	24T75055W03	Choke

Switch

Symbol No.	Part No.	Description
S501	40T16096W03	Tact, SKHHLW (RESET)

Capacitors

	Symbol No.	Part No.	Description
	C001	08S65128F69	CP., 0.01μF
	E001	23S75372W13	ELY., 0.47μF / 50
○	C002	08T15399W01	CP., 0.022μF
□	C002	08T15399W03	CP., 0.047μF
△	C002	08T15399W03	CP., 0.047μF
	E002	23S75372W14	ELY., 0.68μF / 50
○	C003	08T15399W03	CP., 0.047μF
□	C003	08T15399W01	CP., 0.022μF
△	C003	08T15399W01	CP., 0.022μF
	C004	08T15399W01	CP., 0.022μF
	E004	23S75372W04	ELY., 10μF / 16V
	C005	08T15399W01	CP., 0.022μF
	E005	23S75372W02	ELY., 100μF / 10V
	C006	08T15399W01	CP., 0.022μF
	E006	23S75372W14	ELY., 0.68μF / 50
	C007	08S65128F69	CP., 0.01μF
	E007	23S75372W05	ELY., 22μF / 16V
	C008	08T35122W13	PF., 0.1μF
	E008	23S75372W04	ELY., 10μF / 16V
	C009	08S65128F69	CP., 0.01μF
	E009	23S75372W10	ELY., 0.1μF / 50V
	C010	08T15399W02	CP., 0.033μF
	C011	08T35122W15	PF., 0.15μF
	E011	23S75372W05	ELY., 22μF / 16V
	C012	08T15399W02	CP., 0.033μF
	E012	23S75372W16	ELY., 2.2μF / 50V
	C013	08S65128F69	CP., 0.01μF
	E013	23S75372W04	ELY., 10μF / 16V
	C014	08S65128F69	CP., 0.01μF
	E014	23S75372W04	ELY., 10μF / 16V
	C015	08S82122F31	CP., 56pF
	E015	23S75372W10	ELY., 0.1μF / 50V
	C016	08T15399W01	CP., 0.022μF
	E016	23S75372W10	ELY., 0.1μF / 50V
	C017	08S82122F23	CP., 27pF
	E017	23S75372W06	ELY., 33μF / 16V
	C018	08S82122F23	CP., 27pF
	E018	23S75372W10	ELY., 0.1μF / 50V
	C019	08S82122F23	CP., 27pF
	E019	23S75372W15	ELY., 1μF / 50V
	C020	08S82122F23	CP., 27pF
	E020	23S75372W04	ELY., 10μF / 16V
	C021	08S65128F47	CP., 330pF
	C022	08S65128F53	CP., 560pF
	C023	08S65128F69	CP., 0.01μF
	C024	08S65128F56	CP., 820pF
	C025	08T15399W01	CP., 0.022μF
	C026	08S65128F69	CP., 0.01μF
	C027	08S65128F69	CP., 0.01μF
	C028	08S65128F81	CP., 0.039μF

Notes : ○: For TDM-7531R Model only, □: For TDM-7532R Model only, △: For TDM-7535R Model only, Others : Common.

Notes : ○: For TDM-7531R Model only, □: For TDM-7532R Model only, △: For TDM-7535R Model only, Others : Common.

	Symbol No.	Part No.	Description
	C029	08S65128F61	CP., 2200pF
	C031	08S65128F31	CP., 68pF
	C032	08T15807W05	CP., 0.1μF
	C035	23T82372F19	ELY., (B.P) 2.2μF / 50V
	C040	08S65128F35	CP., 100pF
	C042	08S65128F35	CP., 100pF
	C043	08S65128F35	CP., 100pF
△	C201	08T35122W11	CP., 0.068μF
□	E201	23S75372W15	ELY., 1μF / 50V
△	E201	23S75372W15	ELY., 1μF / 50V
△	C202	08T35122W11	CP., 0.068μF
□	E202	23S75372W15	ELY., 1μF / 50V
△	E202	23S75372W15	ELY., 1μF / 50V
	C203	08T35122W07	PF., 0.033μF
□	E203	23S75372W02	ELY., 100μF / 10V
△	E203	23S75372W03	ELY., 220μF / 10V
	C204	08T35122W07	PF., 0.033μF
□	E204	23S75372W14	ELY., 0.68μF / 50V
△	E204	23S75372W10	ELY., 0.1μF / 50V
	C205	08T55390W14	PF., 5600pF
□	E205	23S75372W14	ELY., 0.68μF / 50V
△	E205	23S75372W10	ELY., 0.1μF / 50V
	C206	08T55390W14	PF., 5600pF
□	E206	23S75372W15	ELY., 1μF / 50V
△	E206	23S75372W15	ELY., 1μF / 50V
□	E207	23S75372W05	ELY., 22μF / 16V
△	E207	23S75372W04	ELY., 10μF / 16V
	E208	23S75372W15	ELY., 1μF / 50V
	E209	23S75372W09	ELY., 4.7μF / 35V
	E210	23S75372W09	ELY., 4.7μF / 35V
	E211	23S75372W09	ELY., 4.7μF / 35V
	E212	23S75372W09	ELY., 4.7μF / 35V
	C213	08T65020W07	CP., 0.15μF
	E213	23S75372W15	ELY., 1μF / 50V
	C214	08T65020W07	CP., 0.15μF
	E214	23S75372W15	ELY., 1μF / 50V
	C215	08T65020W07	CP., 0.15μF
	E215	23S75372W02	ELY., 100μF / 10V
	C216	08T65020W07	CP., 0.15μF
	C217	08T65020W07	CP., 0.15μF
	E217	23S75372W15	ELY., 1μF / 50V
	C218	08T65020W07	CP., 0.15μF
	E218	23S75372W15	ELY., 1μF / 50V
	C219	08T65020W07	CP., 0.15μF
	E219	23S75372W15	ELY., 1μF / 50V
	C220	08T65020W07	CP., 0.15μF
	E220	23S75372W07	ELY., 47μF / 16V
	E221	23S75372W15	ELY., 1μF / 50V
	E222	23S75372W09	ELY., 4.7μF / 35V
	E223	23S75372W02	ELY., 100μF / 10V
△	E224	23S75372W04	ELY., 10μF / 16V

	Symbol No.	Part No.	Description
△	E225	23S75372W04	ELY., 10μF / 16V
	E226	23S75372W04	ELY., 10μF / 16V
	E227	23S75372W04	ELY., 10μF / 16V
	E228	23S75372W04	ELY., 10μF / 16V
	E229	23S75372W04	ELY., 10μF / 16V
	E230	23S75372W04	ELY., 10μF / 16V
	E231	23S75372W15	ELY., 1μF / 50V
	E232	23S75372W04	ELY., 10μF / 16V
	E233	23S75372W04	ELY., 10μF / 16V
	E234	23S75372W04	ELY., 10μF / 16V
	E235	23S75372W04	ELY., 10μF / 16V
	E236	23T55405W15	ELY., 1μF / 50V
	E237	23T55405W15	ELY., 1μF / 50V
	E238	23T55405W15	ELY., 1μF / 50V
	E239	23T55405W15	ELY., 1μF / 50V
	E240	23S75372W04	ELY., 10μF / 16V
	E241	23S75372W04	ELY., 10μF / 16V
	E242	23S75372W04	ELY., 10μF / 16V
	E243	23S75372W04	ELY., 10μF / 16V
	E244	23T55378W01	ELY., 220μF / 10V
	E245	23T55378W01	ELY., 220μF / 10V
	C501	08S65128F69	CP., 0.01μF
	E501	23S75372W02	ELY., 100μF / 10V
	C502	08T15399W01	CP., 0.022μF
	E502	23S75372W02	ELY., 100μF / 10V
	C503	08S82122F15	CP., 12pF
	E503	23S75372W04	ELY., 10μF / 16V
	C504	08S82122F15	CP., 12pF
	E504	23S75372W02	ELY., 100μF / 10V
	E506	23S75372W12	ELY., 0.33μF / 50
	E510	23S75372W02	ELY., 100μF / 10V
	C514	08T15399W01	CP., 0.022μF
	C515	08S82122F23	CP., 27pF
	C516	08S82122F23	CP., 27pF
	C519	08S65128F35	CP., 100pF
△	C523	08S65128F69	CP., 0.01μF
	C524	08S65128F47	CP., 330pF
	E801	23S75372W10	ELY., 0.1μF / 50V
	E802	23S75372W04	ELY., 10μF / 16V
	E803	23S75372W04	ELY., 10μF / 16V
	C804	08S65128F69	CP., 0.01μF
	E804	23T00149L26	ELY., 220μF / 16V
	C805	08T15399W01	CP., 0.022μF
	E805	23T55378W01	ELY., 220μF / 10V
	C806	08T15399W01	CP., 0.022μF
	E806	23S75372W04	ELY., 10μF / 16V
	C807	08S53332F67	CP., 0.1μF
	C808	08S53332F67	CP., 0.1μF
	E810	23T00149L27	ELY., 330μF / 16V
	E811	23T35505W12	ELY., 2200μF / 16V
	E812	23T35505W12	ELY., 2200μF / 16V
	E813	23S75372W15	ELY., 1μF / 50V

Notes : ○: For TDM-7531R Model only, □: For TDM-7532R Model only,
△: For TDM-7535R Model only, Others : Common.

Symbol No.	Part No.	Description
Resistors (All resistors are chip 1/10W±5% unless otherwise noted.)		
R001	06S64995F77	10K ohm
R002	06S64995F77	10K ohm
R003	06S64995F77	10K ohm
R004	06S64995F77	10K ohm
R006	06S64995F81	15K ohm
R007	06S64995F61	2.2K ohm
R008	06S64995F61	2.2K ohm
R009	06S64995F53	1K ohm
R012	06S64995F53	1K ohm
R013	06S64995F53	1K ohm
R014	06S64995F61	2.2K ohm
R015	06S64995F61	2.2K ohm
R016	06S64995F29	100 ohm
R017	06S64995F53	1K ohm
R018	06S64995F83	18K ohm
R019	06S64995F85	22K ohm
R020	06S64995F71	5.6K ohm
R021	06S64995F53	1K ohm
R022	06S64995F77	10K ohm
R023	06S64995F61	2.2K ohm
R024	06S64995F53	1K ohm
R025	06S64995F93	47K ohm
R026	06S64995F53	1K ohm
R027	06S64995F93	47K ohm
R028	06S64995F61	2.2K ohm
R030	06S64995F77	10K ohm
R031	06S64995F77	10K ohm
R032	06S64996F02	100K ohm
R033	06S64995F81	15K ohm
R034	06S64996F09	200K ohm
R035	06S64996F14	330K ohm
R036	06S64995F29	100 ohm
R037	06S64995F79	12K ohm
R038	06S64996F04	120K ohm
R039	06S64995F13	22 ohm
R040	06S64996F02	100K ohm
R041	06S64996F02	100K ohm
R042	06S64995F89	33K ohm
R043	06S64995F89	33K ohm
R044	06S64996F26	1M ohm
R045	06S64996F01	91K ohm
○ R051	06S64995F85	22K ohm
○ R052	06S64995F85	22K ohm
○ R053	06S64995F92	43K ohm
○ R054	06S64995F92	43K ohm
R055	06S64995F69	4.7K ohm
R060	06S64995F53	1K ohm
R061	06S64995F53	1K ohm
R062	06S64995F53	1K ohm

Symbol No.	Part No.	Description
R070	06S64995F53	1K ohm
□ R203	06S64996F30	2.2M ohm
△ R203	06S64996F30	2.2M ohm
□ R204	06S64996F30	2.2M ohm
△ R204	06S64996F30	2.2M ohm
□ R205	06S64995F61	2.2K ohm
△ R205	06S64995F60	2K ohm
□ R206	06S64995F61	2.2K ohm
△ R206	06S64995F60	2K ohm
□ R207	06S64995F53	1K ohm
△ R207	06S64995F61	2.2K ohm
□ R208	06S64995F53	1K ohm
△ R208	06S64995F61	2.2K ohm
□ R209	06S64995F85	22K ohm
□ R210	06S64995F92	43K ohm
△ R210	06S64995F84	20K ohm
□ R211	06S64995F69	4.7K ohm
△ R212	06S64995F37	220 ohm
△ R213	06S64995F79	12K ohm
△ R214	06S64995F75	8.2K ohm
○ R221	06S64995F79	12K ohm
□ R221	06S64995F77	10K ohm
△ R221	06S64995F77	10K ohm
○ R222	06S64995F79	12K ohm
□ R222	06S64995F77	10K ohm
△ R222	06S64995F77	10K ohm
○ R223	06S64995F87	27K ohm
□ R223	06S64995F77	10K ohm
△ R223	06S64995F77	10K ohm
○ R224	06S64995F87	27K ohm
□ R224	06S64995F77	10K ohm
△ R224	06S64995F77	10K ohm
△ R225	06S64995F37	220 ohm
△ R226	06S64995F37	220 ohm
R227	06S64995F37	220 ohm
R228	06S64995F37	220 ohm
△ R229	06S64995F85	22K ohm
△ R230	06S64995F85	22K ohm
R231	06S64995F85	22K ohm
R232	06S64995F85	22K ohm
△ R233	06S64995F37	220 ohm
△ R234	06S64995F37	220 ohm
R235	06S64995F37	220 ohm
R236	06S64995F37	220 ohm
R237	06S64995F85	22K ohm
R238	06S64995F85	22K ohm
R239	06S64995F85	22K ohm
R240	06S64995F85	22K ohm
○ R241	06S64995F69	4.7K ohm
□ R241	06S64995F77	10K ohm
△ R241	06S64995F77	10K ohm

Notes : ○: For TDM-7531R Model only, □: For TDM-7532R Model only, △: For TDM-7535R Model only, Others : Common.

Symbol No.	Part No.	Description
○ R242	06S64995F69	4.7K ohm
□ R242	06S64995F77	10K ohm
△ R242	06S64995F77	10K ohm
○ R243	06S64995F69	4.7K ohm
□ R243	06S64995F77	10K ohm
△ R243	06S64995F77	10K ohm
○ R244	06S64995F69	4.7K ohm
□ R244	06S64995F77	10K ohm
△ R244	06S64995F77	10K ohm
R245	06S64995F37	220 ohm
R246	06S64995F37	220 ohm
R247	06S64995F37	220 ohm
R248	06S64995F37	220 ohm
R249	06S64995F67	3.9K ohm
R250	06S64995F67	3.9K ohm
R251	06S64995F67	3.9K ohm
R252	06S64995F67	3.9K ohm
R253	06S64995F57	1.5K ohm
R254	06S64995F57	1.5K ohm
R255	06S64995F57	1.5K ohm
R256	06S64995F57	1.5K ohm
R257	06S64995F53	1K ohm
R258	06S64995F53	1K ohm
R259	06S64995F53	1K ohm
R260	06S64995F53	1K ohm
R261	06S64995F57	1.5K ohm
R262	06S64995F57	1.5K ohm
R263	06S64995F57	1.5K ohm
R264	06S64995F57	1.5K ohm
R265	06S53331F40	2.2 ohm 1/8W
R266	06S53331F40	2.2 ohm 1/8W
R267	06S53331F40	2.2 ohm 1/8W
R268	06S53331F40	2.2 ohm 1/8W
R270	06S53331F40	2.2 ohm 1/8W
R271	06S53331F40	2.2 ohm 1/8W
R272	06S53331F40	2.2 ohm 1/8W
R275	06S53331F40	2.2 ohm 1/8W
R501	06S64995F41	330 ohm
R502	06S64995F89	33K ohm
R503	06S64995F93	47K ohm
R504	06S64995F93	47K ohm
R505	06S64995F93	47K ohm
R506	06S64995F69	4.7K ohm
○ R507	06S64995F45	470 ohm
□ R507	06S64995F53	1K ohm
△ R507	06S64995F53	1K ohm
R508	06S64995F85	22K ohm
R509	06S64995F93	47K ohm
R510	06S64995F93	47K ohm
△ R512	06S64995F61	2.2K ohm
□ R513	06S64995F61	2.2K ohm

Symbol No.	Part No.	Description
△ R513	06S64995F61	2.2K ohm
R514	06S64995F85	22K ohm
R515	06S64995F53	1K ohm
R516	06S64995F53	1K ohm
R517	06S64995F62	2.4K ohm
R518	06S64996F02	100K ohm
R519	06S64996F02	100K ohm
R520	06S64995F85	22K ohm
R521	06S64995F69	4.7K ohm
R522	06S64995F61	2.2K ohm
R523	06S64995F53	1K ohm
R524	06S64995F53	1K ohm
R525	06S64996F02	100K ohm
R526	06S64995F93	47K ohm
R527	06S64995F93	47K ohm
R531	06S64995F93	47K ohm
R532	06S64995F93	47K ohm
R533	06S64995F93	47K ohm
R537	06S64995F53	1K ohm
R540	06S64995F93	47K ohm
R544	06S64995F93	47K ohm
R550	06S64995F85	22K ohm
R551	06S64995F77	10K ohm
R552	06S70072F77	10K ohm 1/4W
R553	06S70072F77	10K ohm 1/4W
R554	06S70072F77	10K ohm 1/4W
R556	06S70072F75	8.2K ohm 1/4W
R557	06S70072F75	8.2K ohm 1/4W
R558	06S70072F75	8.2K ohm 1/4W
R559	06S64995F77	10K ohm
R560	06S64995F77	10K ohm
R561	06S64995F77	10K ohm
R562	06S64995F77	10K ohm
R563	06S64995F77	10K ohm
R564	06S70072F53	1K ohm 1/4W
R565	06S64996F02	100K ohm
△ R566	06S64995F77	10K ohm
△ R567	06S64995F93	47K ohm
R568	06S64995F85	22K ohm
R569	06S64995F85	22K ohm
R570	06S53330F85	22K ohm 1/8W
R571	06S70072F37	220 ohm 1/4W
R573	06S64995F93	47K ohm
R574	06S64996F02	100K ohm
R577	06S64995F93	47K ohm
R579	06S64995F53	1K ohm
R580	06S64995F53	1K ohm
R581	06S64995F53	1K ohm
R582	06S64995F53	1K ohm
R583	06S64995F53	1K ohm
R584	06S64995F53	1K ohm

Notes : ○: For TDM-7531R Model only, □: For TDM-7532R Model only, △: For TDM-7535R Model only, Others : Common.

	Symbol No.	Part No.	Description
	R585	06S64995F53	1K ohm
	R586	06S64995F53	1K ohm
	R587	06S64996F10	220K ohm
	R588	06S64995F53	1K ohm
△	R589	06S70072F26	75 ohm 1/4W
	R590	06S64995F77	10K ohm
	R591	06S64995F61	2.2K ohm
	R593	06S64995F53	1K ohm
	R594	06S64995F53	1K ohm
	R595	06S64995F53	1K ohm
	R596	06S64995F53	1K ohm
○	R801	06S70072F69	4.7K ohm 1/4W
□	R801	06S70072F69	4.7K ohm 1/4W
△	R801	06S70072F66	3.6K ohm 1/4W
	R803	06S53330F69	4.7K ohm 1/8W
	R804	06S53330F77	10K ohm 1/8W
	R805	06S70072F45	470 ohm 1/4W
	R806	06S64995F77	10K ohm
	R807	06S70072F61	2.2K ohm 1/4W
	R808	06S64995F77	10K ohm
	R809	06S70072F03	6.8 ohm 1/4W
	R810	06S70072F03	6.8 ohm 1/4W
	R811	06S70072F03	6.8 ohm 1/4W
	R812	06S64995F77	10K ohm
	R813	06S64995F77	10K ohm
	R814	06S70072F57	1.5K ohm 1/4W
	R815	06S53330F77	10K ohm 1/8W
	R816	06S64996F02	100K ohm
	R817	06S70072F40	300 ohm 1/4W
	R818	06S70072F57	1.5K ohm 1/4W
	R819	06S70072F57	1.5K ohm 1/4W
	R820	06S70072F57	1.5K ohm 1/4W
	R821	06S64995F77	10K ohm
	R822	06S70072F57	1.5K ohm 1/4W
	R824	06S70072F57	1.5K ohm 1/4W
	R825	06S64995F77	10K ohm
	R831	06S64995F65	3.3K ohm
	R832	06S64995F53	1K ohm
	R833	06S70072F61	2.2K ohm 1/4W
	R834	06S64995F77	10K ohm
	R835	06S70072F41	330 ohm 1/4W
	R836	06S53330F73	6.8K ohm 1/8W
□	VR201	18T15356W13	Variable, 10K ohm
△	VR201	18T15356W13	Variable, 10K ohm
□	VR202	18T15356W13	Variable, 10K ohm
△	VR202	18T15356W13	Variable, 10K ohm

	Symbol No.	Part No.	Description
	Front P. C. Board		
	IC's		
	IC401	51T55492W01	LC75850W
	IC402	51T55246W02	RPM-638CBL
	Transistors		
△	Q451	48T63788F04	CP., 2SD1328
△	Q452	48T63788F04	CP., 2SD1328
△	Q453	48T63788F04	CP., 2SD1328
△	Q454	48T63788F04	CP., 2SD1328
△	Q455	48T63788F04	CP., 2SD1328
△	Q456	48T63788F04	CP., 2SD1328
	Diodes		
	D401	48T64134F01	CP., DA204K
	D402	48T64134F01	CP., DA204K
	D403	48T64134F01	CP., DA204K
	D404	48T64134F01	CP., DA204K
	LED's		
△	LD401	48T65477W01	CP., SML-010DT2(ORG)
	LD402	48T65477W03	CP., SML-010PT(GRN)
△	LD403	48T65477W02	CP., SML-010LT(RED)
	Switches		
	S410	40T55656W03	CP. Tact, SKQMAJ (POW)
○	S411	40T55656W03	CP. Tact, SKQMAJ (AUDIO DN)
□	S411	40T55656W03	CP. Tact, SKQMAJ (AUDIO DN)
○	S412	40T55656W03	CP. Tact, SKQMAJ (TUNER BAND / PTY)
□	S412	40T55656W03	CP. Tact, SKQMAJ (TUNER BAND / PTY)
△	S412	40T55656W03	CP. Tact, SKQMAJ (TUNER / BAND)
○	S414	40T55656W03	CP. Tact, SKQMAJ (1)
□	S414	40T55656W03	CP. Tact, SKQMAJ (1 / DOLBY B)
△	S414	40T55656W03	CP. Tact, SKQMAJ (1 / DOLBY B·C)
○	S415	40T55656W03	CP. Tact, SKQMAJ (2)
□	S415	40T55656W03	CP. Tact, SKQMAJ (2 / P.S DN)
△	S415	40T55656W03	CP. Tact, SKQMAJ (2 / P.S DN)
○	S416	40T55656W03	CP. Tact, SKQMAJ (3)
□	S416	40T55656W03	CP. Tact, SKQMAJ (3 / P.S UP)
△	S416	40T55656W03	CP. Tact, SKQMAJ (3 / P.S UP)
	S417	40T55656W03	CP. Tact, SKQMAJ (6 / PROG)
△	S418	40T55571W01	CP. Tact, SKQAXX(AUDIO DN)
	S420	40T55656W03	CP. Tact, SKQMAJ (RDS)

Notes : ○: For TDM-7531R Model only, □: For TDM-7532R Model only,
△: For TDM-7535R Model only, Others : Common.

	Symbol No.	Part No.	Description
	S421	40T55656W03	CP. Tact, SKQMAJ (TAPE · PLAY / PAUSE)
○	S422	40T55656W03	CP. Tact, SKQMAJ (AUDIO UP)
□	S422	40T55656W03	CP. Tact, SKQMAJ (AUDIO UP)
	S423	40T55656W03	CP. Tact, SKQMAJ (MODE / LOUD)
	S425	40T55656W03	CP. Tact, SKQMAJ (DISC · PLAY / PAUSE)
○	S426	40T55656W03	CP. Tact, SKQMAJ (4)
□	S426	40T55656W03	CP. Tact, SKQMAJ (4 / B.SKIP)
△	S426	40T55656W03	CP. Tact, SKQMAJ (4 / B.SKIP)
	S427	40T55656W03	CP. Tact, SKQMAJ (5)
△	S428	40T55571W01	CP. Tact, SKQAXX (AUDIO UP)
	S430	40T55656W03	CP. Tact, SKQMAJ (EJECT)
○	S431	40T55656W03	CP. Tact, SKQMAJ (T.INFO / MIX)
□	S431	40T55656W03	CP. Tact, SKQMAJ (T.INFO / MIX)
△	S431	40T55656W03	CP. Tact, SKQMAJ (SCAN / MIX)
	S432	40T55656W03	CP. Tact, SKQMAJ (M.S CD·DN / REW)
	S433	40T55656W03	CP. Tact, SKQMAJ (TUNE·A.MEMO / REPEAT)
	S434	40T55656W03	CP. Tact, SKQMAJ (M.S. CD·UP / FF)
△	S435	40T55656W03	CP. Tact, SKQMAJ (T.INFO)
△	S436	40T55656W03	CP. Tact, SKQMAJ (PTY)
	Lamps		
△	PL451	65T75231W02	9V-85mA
	PL452	65T75231W01	9V-85mA
△	PL454	65T75233W01	CP., 6V-80mA
△	PL455	65T75233W01	CP., 6V-80mA
	PL456	65T75233W01	CP., 6V-80mA
	PL457	65T75233W01	CP., 6V-80mA
	PL458	65T75233W01	CP., 6V-80mA
	PL459	65T75233W01	CP., 6V-80mA
△	PL460	65T75233W01	CP., 6V-80mA
△	PL461	65T75233W01	CP., 6V-80mA
△	PL462	65T75233W01	CP., 6V-80mA
△	PL463	65T75233W01	CP., 6V-80mA
	PL464	65T75233W01	CP., 6V-80mA
	PL465	65T75233W01	CP., 6V-80mA
	PL466	65T75233W01	CP., 6V-80mA
	Capacitors		
	C401	08S82122F53	CP., 470pF
	E401	23T25191W42	CP., ELY. 22μF / 6.3V
	C402	08T15399W03	CP., 0.047μF

	Symbol No.	Part No.	Description
	Resistors (All resistors are chip 1/10W±5% unless otherwise noted.)		
	R401	06S64995F79	12K ohm
	R402	06S64995F77	10K ohm
	R403	06S64995F77	10K ohm
	R404	06S64995F77	10K ohm
	R405	06S64995F77	10K ohm
	R406	06S64995F53	1K ohm
	R407	06S64995F79	12K ohm
	R408	06S64995F71	5.6K ohm
	R411	06S64995F55	1.2K ohm
	R412	06S64995F57	1.5K ohm
	R413	06S64995F61	2.2K ohm
	R414	06S64995F65	3.3K ohm
	R415	06S64995F71	5.6K ohm
	R416	06S64995F78	11K ohm
	R417	06S64995F89	33K ohm
	R421	06S64995F55	1.2K ohm
	R422	06S64995F57	1.5K ohm
	R423	06S64995F61	2.2K ohm
	R424	06S64995F65	3.3K ohm
	R425	06S64995F71	5.6K ohm
	R426	06S64995F78	11K ohm
	R427	06S64995F89	33K ohm
	R431	06S64995F55	1.2K ohm
	R432	06S64995F57	1.5K ohm
	R433	06S64995F61	2.2K ohm
	R434	06S64995F65	3.3K ohm
△	R435	06S64995F71	5.6K ohm
△	R436	06S64995F78	11K ohm
	R441	06S64995F53	1K ohm
	R442	06S64995F53	1K ohm
	R443	06S64995F53	1K ohm
	R444	06S64995F53	1K ohm
	R445	06S64996F04	120K ohm
△	R451	06S70072F12	20 ohm 1/4W
	R452	06S70072F04	8.2 ohm 1/4W
	R453	06S70072F13	22 ohm 1/4W
	R454	06S70072F13	22 ohm 1/4W
	R455	06S70072F13	22 ohm 1/4W
△	R456	06S70072F17	33 ohm 1/4W
	R457	06S70072F15	27 ohm 1/4W
	R458	06S70072F13	22 ohm 1/4W
△	R459	06S70072F16	30 ohm 1/4W
△	R460	06S70072F13	22 ohm 1/4W
	R461	06S70072F13	22 ohm 1/4W
△	R463	06S64995F61	2.2K ohm
△	R464	06S64995F61	2.2K ohm
△	R465	06S64995F61	2.2K ohm
△	R466	06S64995F61	2.2K ohm
△	R467	06S64995F61	2.2K ohm

Notes : ○: For TDM-7531R Model only, □: For TDM-7532R Model only,
△: For TDM-7535R Model only, Others : Common.

Symbol No.	Part No.	Description
△ R468	06S64995F61	2.2K ohm
R469	06S70072F13	22 ohm 1/4W
△ R472	06S70072F43	390 ohm 1/4W
R473	06S70072F43	390 ohm 1/4W
△ R476	06S70072F17	33 ohm 1/4W
R477	06S70072F15	27 ohm 1/4W
R478	06S70072F13	22 ohm 1/4W
△ R479	06S70072F17	33 ohm 1/4W
△ R480	06S70072F13	22 ohm 1/4W
R481	06S70072F13	22 ohm 1/4W
△ R482	06S70072F26	75 ohm 1/4W
R483	06S64996F02	100K ohm
R485	06S70072F13	22 ohm 1/4W

○ GR Control P. C. Board

IC's

IC1201	51T64606F02	TA7705F
IC1701	51T25621W02	AN6275NK

Transistor / Diode

Q1701	48T84366F05	2SB1243
D1201	48T44813F01	Diode, MA165TA

Capacitors

C1201	08S53332F31	CP.,	470pF
E1201	23S82482F02	ELY.,	100μF / 16V
C1202	08S53332F31	CP.,	470pF
E1202	23S61523F12	ELY.,	10μF / 16V
or	23T55402W15	ELY.,	10μF / 16V
C1203	08S53332F31	CP.,	470pF
E1203	23S61523F07	ELY.,	47μF / 6.3V
or	23T55402W07	ELY.,	47μF / 6.3V
C1204	08S53332F31	CP.,	470pF
E1204	23S61523F07	ELY.,	47μF / 6.3V
or	23T55402W07	ELY.,	47μF / 6.3V
C1205	08S53332F48	CP.,	0.012μF
E1205	23S61523F17	ELY.,	4.7μF / 25V
or	23T55402W20	ELY.,	4.7μF / 25V
C1206	08S53332F48	CP.,	0.012μF
E1206	23S61523F17	ELY.,	4.7μF / 25V
or	23T55402W20	ELY.,	4.7μF / 25V

Resistors (All resistors are chip 1/8W±5% unless otherwise noted.)

R1201	06S53330F29	100 ohm
R1202	06S53330F65	3.3K ohm
R1203	06S53330F32	130 ohm
R1204	06S53330F32	130 ohm
R1205	06S64996F14	330K ohm1/10W
R1206	06S64996F14	330K ohm1/10W
R1207	06S64995F78	11K ohm1/10W
R1208	06S53330F78	11K ohm
R1209	06S53330F81	15K ohm
R1210	06S53330F81	15K ohm
R1211	06S53330F65	3.3K ohm

□△ GR Control P. C. Board

IC's / Transistors

IC1501	51T25621W02	IC, AN6275NK
IC1502	51T67915F01	IC, M51143AL
Q1501	48T84366F05	2SB1243
Q1502	48T94606F12	CP., DTC144TU

Capacitors

E1501	23S61524F32	ELY.,	1μF / 50V
or	23T55521W34	ELY.,	1μF / 50V
C1502	08T35374W01	CP.,	0.1μF
C1503	08T35374W01	CP.,	0.1μF
C1504	08T35374W01	CP.,	0.1μF
C1505	08S65128F15	CP.,	15pF

Resistors (All resistors are chip 1/10W±5% unless otherwise noted.)

R1501	06S64995F77	10K ohm
R1502	06S64995F77	10K ohm
R1503	06S64996F10	220K ohm
R1504	06S64996F26	1M ohm
R1505	06S64996F18	470K ohm
R1506	06S64996F01	91K ohm

Notes : ○: For TDM-7531R Model only, □: For TDM-7532R Model only, △: For TDM-7535R Model only, Others : Common.

□△ GR Audio P. C. Board

IC / Diode

IC1201	51T15146W01	IC, TA7705P
D1201	48T44813F01	MA165TA

Capacitors

E1201	23S61524F13	ELY.,	10μF / 16V
or	23T55521W15	ELY.,	10μF / 16V
C1202	08S72783F27	CP.,	220pF
E1202	23S61524F08	ELY.,	100μF / 6.3V
or	23T55521W07	ELY.,	100μF / 6.3V
C1203	08S72783F27	CP.,	220pF
E1203	23S61524F08	ELY.,	100μF / 6.3V
or	23T55521W07	ELY.,	100μF / 6.3V
C1204	08S72783F27	CP.,	220pF
E1204	23S82482F02	ELY.,	100μF / 16V
or	23T55521W19	ELY.,	100μF / 16V
C1205	08S72783F27	CP.,	220pF
E1205	23S61524F18	ELY.,	4.7μF / 25V
or	23T55521W20	ELY.,	4.7μF / 25V
E1206	23S61524F18	ELY.,	4.7μF / 25V
or	23T55521W20	ELY.,	4.7μF / 25V
C1208	08T35122W02	TF,	0.012μF
C1209	08T35122W02	TF,	0.012μF

Resistors (All resistors are chip 1/10W±5% unless otherwise noted.)

R1201	06S53330F29	100 ohm 1/8W
R1202	06S53330F32	130 ohm 1/8W
R1203	06S53330F32	130 ohm 1/8W
R1204	06S64996F14	330K ohm
R1205	06S64996F14	330K ohm
R1208	06S64995F79	12K ohm
R1209	06S64995F79	12K ohm
R1210	06S64995F81	15K ohm
R1211	06S64995F81	15K ohm
R1212	06S64995F65	3.3K ohm
R1213	06S53330F65	3.3K ohm 1/8W
R1214	06S53330F85	22K ohm 1/8W
R1215	06S64995F85	22K ohm

Miscellaneous

Symbol No.	Part No.	Description
○ CB401	09T75038W14	16Pin Connector
□ CB401	09T75038W14	16Pin Connector
△ CB401	09T75038W16	16Pin Connector
CH401	09T75039W16	16Pin Connector
ET001	09T55211W01	Antenna Receptacle
○ ET201	01T55244W05	Assy., Connectors (Rear Output RCA Connectors / Remote Turn-On Lead)
□ ET201	01T55244W05	Assy., Connectors (Rear Output RCA Connectors / Remote Turn-On Lead)
△ ET201	01T55244W07	Assy., Connectors (Front / Rear Output RCA Connectors / Audio Interrupt In Lead / Remote Turn-On Lead)
ET801	01T75292W01	Assy., ISO Connector (Open / Speaker Output / Power)
○ HD1101	88T10373W02	Head
□ HD1101	88T15971W02	Head
△ HD1101	88T15971W02	Head
○ M1501	01V53200W99	Assy., Main Motor (13.2V-105mA)
□ M1501	01V51800W42	Assy., Main Motor (13.2V-105mA)
△ M1501	01V51800W42	Assy., Main Motor (13.2V-105mA)
JK502	09T16653W01	DIN Connector
LCD401	65T75146W01	LCD Display
PT1501	51T15144W01	Sensor, Photo ON2170-R
S1501	40T15222W01	Switch, Detector (PACK IN)
S1502	40T15382W01	Switch, Detector (PACK DOWN)
S1503	40T15382W01	Switch, Detector (METAL)
SD1501	01T10369W02	Assy., Eject Solenoid
SD1502	01T15249W01	Assy., Play Solenoid
SD1503	01T10371W01	Assy., RF Solenoid

Notes : ○: For TDM-7531R Model only, □: For TDM-7532R Model only, △: For TDM-7535R Model only, Others : Common.

Exploded View (Cabinet)

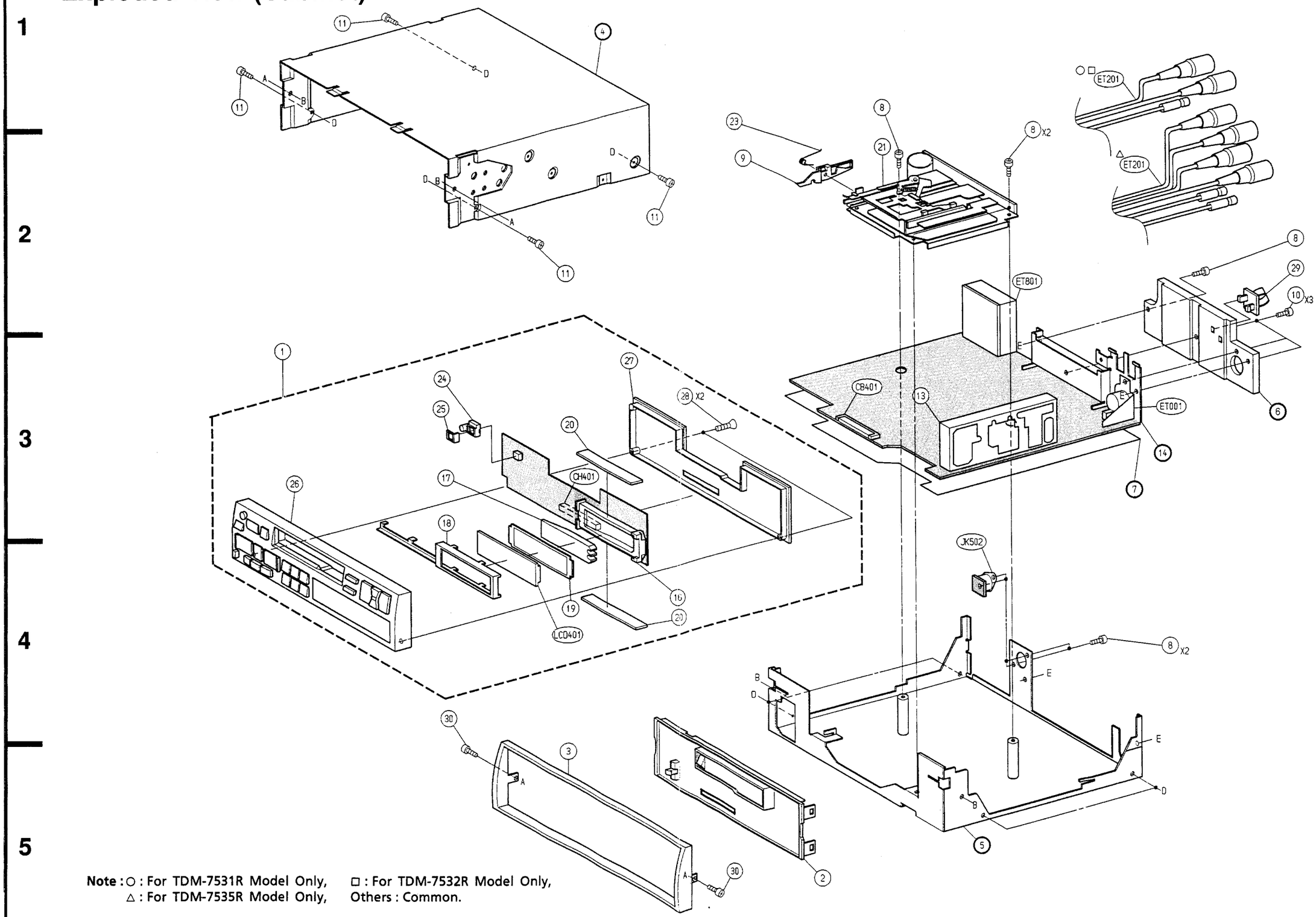

Note : ○ : For TDM-7531R Model Only, □ : For TDM-7532R Model Only,
△ : For TDM-7535R Model Only, Others : Common.

Cabinet Assembly Parts List

Note : No parts number on parts list are not supplied.

Symbol No.		Index	Part No.	Description
○	1	3-B	01V71800W61	Assy., Nose Unit
□	1	3-B	01V71800W56	Assy., Nose Unit
△	1	3-B	01V71700W43	Assy., Nose Unit
	2	5-E	13C70374W01	Assy., Front Escutcheon
	3	5-C	33C70276W01	Assy., Face Plate
	8		03S44205G29	Screw, Pan (M2.6×6)
	9	2-D	45C61079W01	Lever, Door
	10	2-G	03S38013W02	Screw, Pan (M2.6×14)
	11		03S38013W24	Screw, Pan (M2.6×6)
	13	3-E	77B60578W01	FM/MW/LW Tuner Unit, MB4R3010 (FE001)
	16	4-D	15B70308W01	Case, LCD
	17	3-C	61A70307W01	Lens, LCD
	18	3-C	15B70852W01	Cover, LCD
	19	4-D	26A70309W01	Reflector, Sheet
	20		75T75143W01	Rubber, Connector
○	21	2-E	81D50232W01	Cassette Deck, GR75H110
□	21	2-E	81D40887W02	Cassette Deck, GR75H120
△	21	2-E	81D40887W02	Cassette Deck, GR75H120
	23	1-D	41A20424W01	Spring, Door
	24	3-C	43A70639W01	Spacer, Remote
	25	3-C	07A71469W01	Bracket, Remote
○	26	3-B	13D70279W09	Assy., Nosepiece
□	26	3-B	13D70279W06	Assy., Nosepiece
△	26	3-B	13D70279W03	Assy., Nosepiece
	27	3-D	13D70291W01	Nose, Bottom
	28	3-D	03S68555F39	Screw, Countersink (M1.7×10)
	29	2-G	15A70387W01	Holder, Antenna
	30		03S38013W13	Screw, Bind (M2.6×6)

Symbol No.	Index	Part No.	Description

Notes : ○: For TDM-7531R Model only, □: For TDM-7532R Model only,
△: For TDM-7535R Model only, Others : Common.

Packing Assembly Parts List

Symbol No.	Part No.	Description
101	15D50406W01	Case, Inner
102	07B64552F01	Bracket, Strap Receiver
103	15D60773W01	Carring Case
104-1	02B47353F01	Nut, Hex. (M5)
104-2	03S72235F13	Screw, Countersink (M5×8)
104-3	46A42363F01	Stud, Bolt
104-4	36A11113W01	Cap, Rubber (A)
104-5	03A11112W01	Bolt, Hex. (M5)
104-6	01T75363W01	JASO / ISO Antenna Adaptor
105	68P61329W47	Owner's Manual

Symbol No.	Part No.	Description

Packing Method View

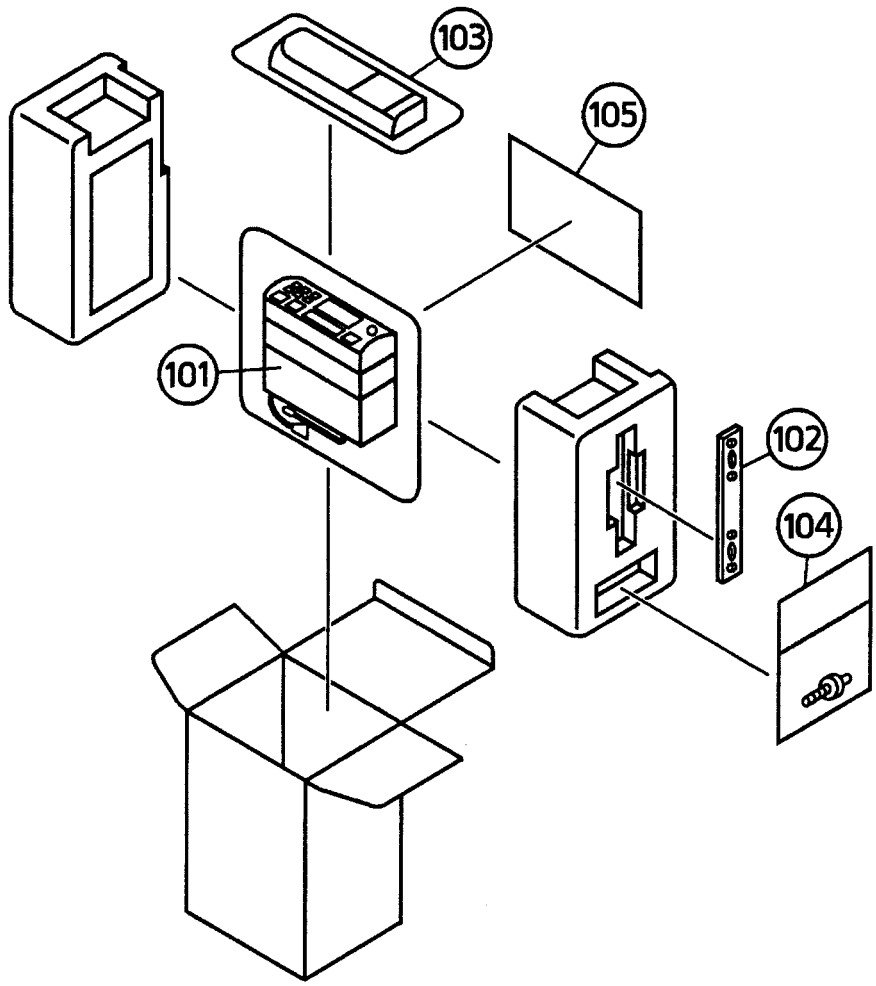

Semi - Conductor Lead Identifications

Note : For the parts not mentioned, refer to the Schematic Diagram.

45609W26 : IC501

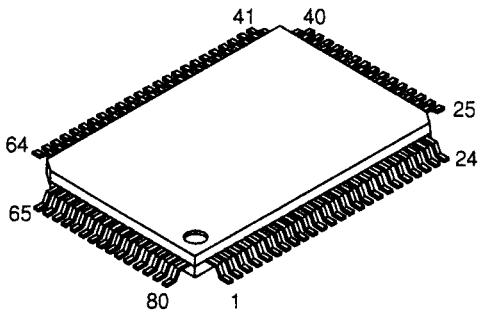

PIN NO.	CODE ADDRESS	I/O	PIN NO.	CODE ADDRESS	I/O	PIN NO.	CODE ADDRESS	I/O	PIN NO.	CODE ADDRESS	I/O
1	NOSE ON	I	21	NC	—	41	LED IND	O	61	GND	—
2	AV_{REF}	I	22	PWR IC ON	O	42	LCD CLK	O	62	GND	—
3	V_{DD}	—	23	POWER CONT	O	43	$\overline{GRN/ORG}$	O	63	GND	—
4	V_{DD}	—	24	A.MUTE	O	44	LCD DATA	O	64	GND	—
5	AV REF OUT	O	25	NC	—	45	$\overline{LCD\ INH}$	O	65	GND	—
6	PLAY SOL	O	26	NC	—	46	$\overline{DTS\ MUTE}$	I	66	GND	—
7	RF SOL	O	27	NC	—	47	ACC+5	I	67	GND	—
8	EJECT SOL	O	28	IN INT	I	48	CHG D-IN	I	68	GND	—
9	MOTOR CONT	O	29	CHG D-OUT	O	49	REMOCON	I	69	GND	—
10	O.MOTOR	O	30	E.VOL.CLK	O	50	DTS STATUS	I	70	GND	—
11	FOR/$\overline{REV}$	O	31	E.VOL.DATA	O	51	DTS CMD	O	71	GND	—
12	O.FAST	O	32	NC	—	52	$\overline{DTS\ SCK}$	O	72	GND	—
13	PACK IN	I	33	GND	—	53	BATT+5V	I	73	GND	—
14	M.S.DET	I	34	NC	—	54	GND	—	74	GND	—
15	GND	—	35	$\overline{DOLBY\ C}$	O	55	GND	—	75	GND	—
16	GND	—	36	$\overline{DOLBY\ B}$	O	56	NC	—	76	PACK DOWN	I
17	GND	—	37	LCD CE	O	57	GND	—	77	RUN DET	I
18	AREA 0	I	38	DTS CE	O	58	X1	I	78	KEY-IN AD0	I
19	AREA 1	I	39	DTS START	O	59	X2	O	79	KEY-IN AD1	I
20	TP ALARM	O	40	NOSE POWER	O	60	$\overline{RESET}$	I	80	KEY-IN AD2	I

75099W04 : IC504

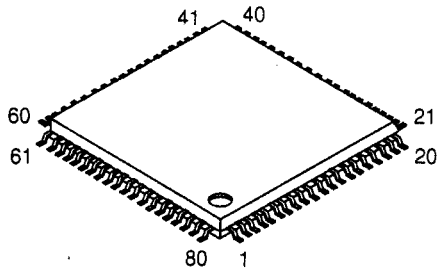

PIN NO.	CODE ADDRESS	I/O	PIN NO.	CODE ADDRESS	I/O	PIN NO.	CODE ADDRESS	I/O	PIN NO.	CODE ADDRESS	I/O
1	LW	O	21	NC	—	41	NC	—	61	RDS CLK	I
2	LO/$\overline{DX}$	O	22	NC	—	42	NC	—	62	RDS DATA	I
3	NC	—	23	NC	—	43	NC	—	63	DTS CE	I
4	AV_{SS}	—	24	NC	—	44	NC	—	64	NC	—
5	$\overline{LPF\ SW}$	O	25	NC	—	45	NC	—	65	NC	—
6	IF MUTE	O	26	NC	—	46	NC	—	66	NC	—
7	AV_{REF1}	I	27	NC	—	47	NC	—	67	50K REF	O
8	PLL UP	—	28	NC	—	48	NC	—	68	V_{DD}	—
9	NC	—	29	NC	—	49	NC	—	69	X2	O
10	NC	—	30	NC	—	50	NC	—	70	X1	I
11	PLL CLK	O	31	NC	—	51	NC	—	71	V_{SS}	—
12	PLL DATA	O	32	NC	—	52	NC	—	72	NC	—
13	PLL CE	O	33	V_{SS}	—	53	NC	—	73	PLL D-IN	I
14	DTS MUTE	O	34	NC	—	54	NC	—	74	AV_{DD}	—
15	DTS START	I	35	NC	—	55	NC	—	75	AV_{REF0}	I
16	DTS CMD	I	36	NC	—	56	NC	—	76	S.METER	I
17	DTS STATUS	O	37	NC	—	57	NC	—	77	ADJ-ON	I
18	DTS CLOCK	I	38	NC	—	58	FM/$\overline{AM}$	O	78	MULTI PATH	I
19	NC	—	39	NC	—	59	AUDIO IN	I	79	$\overline{ST}$	I
20	NC	—	40	NC	—	60	$\overline{RESET}$	I	80	SD	I

ALPINE SERVICE MANUAL

Exploded View & Parts List For Cassette Deck Mechanism

ADDENDUM & REVISED

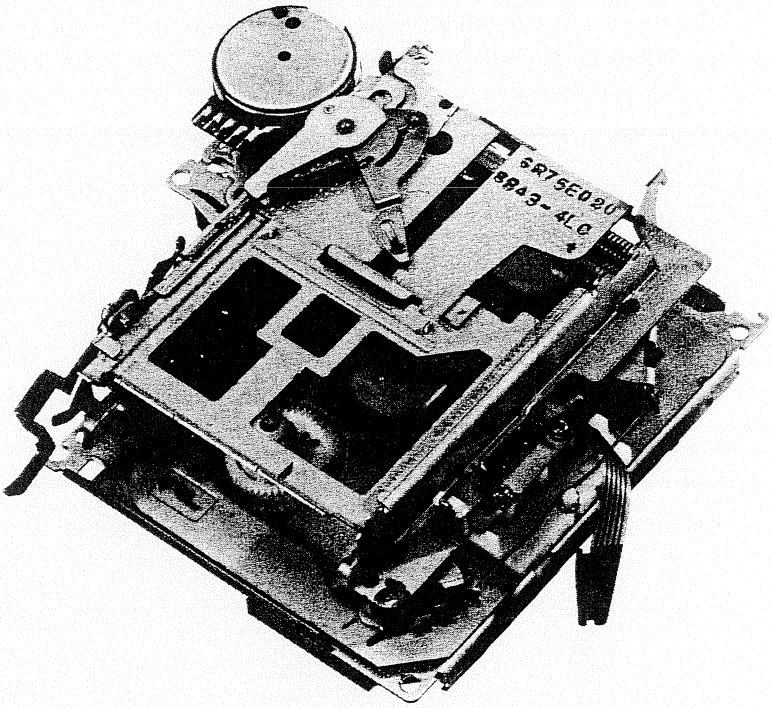

GR SERIES

Contents

List of Usable Lock Washers 3

List of Usable Oil 3

List of Usable Jigs 3

Disassembly, Assembly and Replacement of Functional Parts ..... 5 to 16

Exploded View (Cassette Deck) ..... 17 to 18

Cassette Deck Assembly Parts List ..... 19 to 20

List of Usable Lock Washers

	SIZE	PARTS NO.	QUANTITY
1	(M1.2 × 3.5 × 0.25)	04A41345P01	8
2	(M1.7 × 3.5 × 0.25)	04A41345P02	1
3	(M2.1 × 5 × 0.25)	04A41345P06	1
4	(M1.2 × 2.5 × 0.25)	04A41345P11	8
5	(M1.7 × 3.5 × 0.35)	04A41345P12	2
6	(M1.2 × 3.5 × 0.35)	04A41345P15	1
7	(M1 × 2.5 × 0.25)	04A41345P17	1
8	(M2.6 × 5 × 0.25)	04A41345P29	1
9	(M3.1 × 8 × 0.05)	04A41345P30	1
10	(M1.7 × 3 × 0.25)	04A41345P31	1
11	(M3.1 × 5 × 0.35)	04A41345P32	2

List of Usable Oil

1) Molykote E paste
2) Grease EM-30L
3) Grease FLOIL 425A

List of Usable Jigs

1) GR bottom gear jig (Part No. 44A20788W01)
2) Head height adjustment gauge
   (M-300 or AT-500)

Memo

Disassembly, Assembly and Replacement of Functional Parts

1. Disassembly and Assembly of Bottom Cover

(1) Turn the mechanism around as shown in Figure 1.
(2) Remove M1 lock washer ① as shown in Figure 1.
(3) Remove three screws ② as shown in Figure 1.
(4) Lift the bottom cover slowly from the position Ⓐ-1, pull the hooks out of the holes in the chassis, and remove the bottom cover as shown in Figure 1.
(5) When remounting the bottom cover, first turn the front of the mechanism up as shown in Figure 2.
(6) Slide the slider in the direction Ⓐ-2 as shown in Figure 2.
(7) Push down the cassette holder in the direction Ⓐ-3 as shown in Figure 2.
(8) Pull the door pin in the direction Ⓐ-4 so that the mechanism is locked in as shown in Figure 2.
(9) Turn the mechanism around as shown in Figure 3.
(10) Pull the automatic metal lever in the direction Ⓐ-5 and the RF solenoid chip in the direction Ⓐ-6 as shown in Figure 3.
(11) Insert the hooks of the bottom cover into the chassis in the direction Ⓐ-7, and then join the part Ⓐ-8 of the bottom cover to the chassis slowly, making sure that the 3 points indicated with the straight lines in the Figure 3 are fitted properly.
If there are troubles in mounting the bottom cover, do not apply force but remove the bottom cover once again and check the positions of the individual parts. (Refer to Figure 3.)
(12) Since the hooks marked Ⓐ-8 will be lifted slightly as shown in Figure 4, insert the jig through the hole Ⓐ-9, and fix it turning the jig slightly.
Instead of operation (12), turn the gear nose slowly with a precision screwdriver etc., taking care not to damage it.
After 2 to 3 turns, it will click into place.
(Refer to Figure 4 and 5.)
(13) Fix the screws and the lock washer that have been removed.

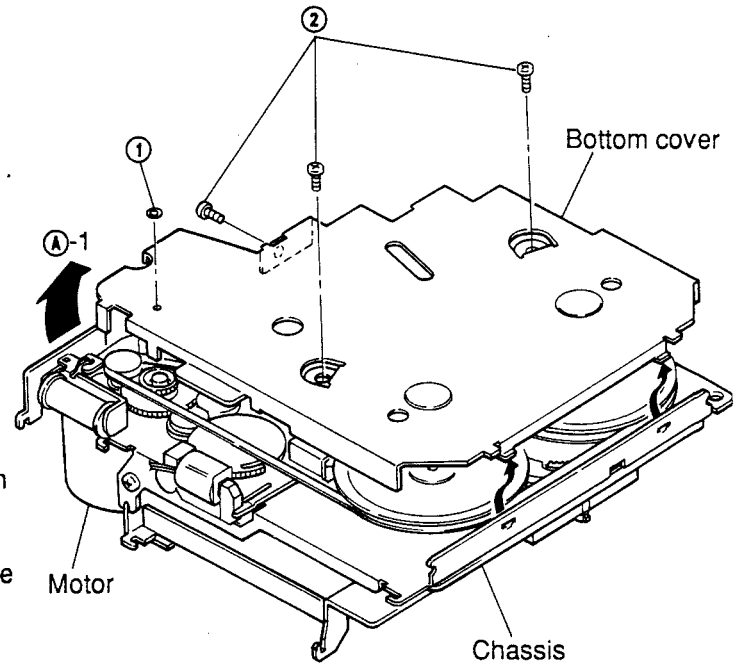

Figure 1

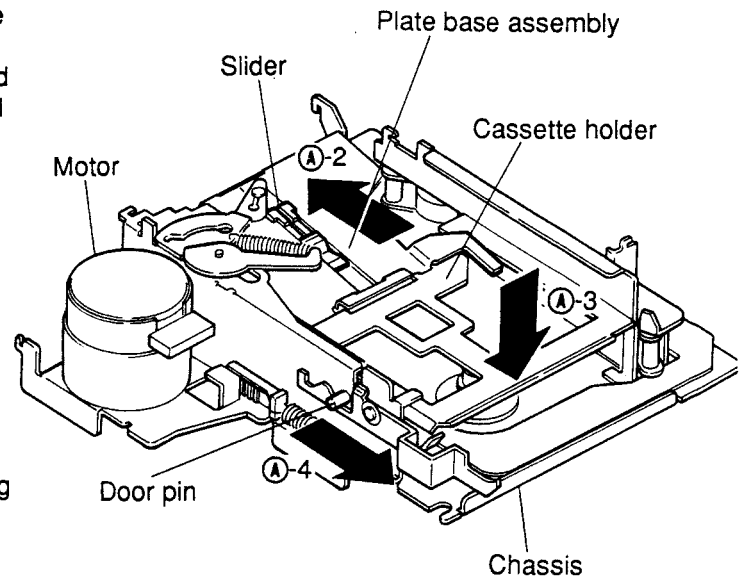

Figure 2

(14) Insert the jig into the hole Ⓐ-9 as shown in Figure and rotate the eject solenoid counterclockwise about 20 times, pulling it in the direction Ⓐ-10 with the finger.
Then the eject operation is completed.
Instead of operation (14), the eject operation can be performed by mounting the mechanism to the product. (Refer to Figures 4 and 5.)

Note: Do not reuse the used lock washers for mounting.
When turning the mechanism, be careful not to drop the gear and the flywheel.
Fasten the three screws with a fastening torque of 6 kg/cm.

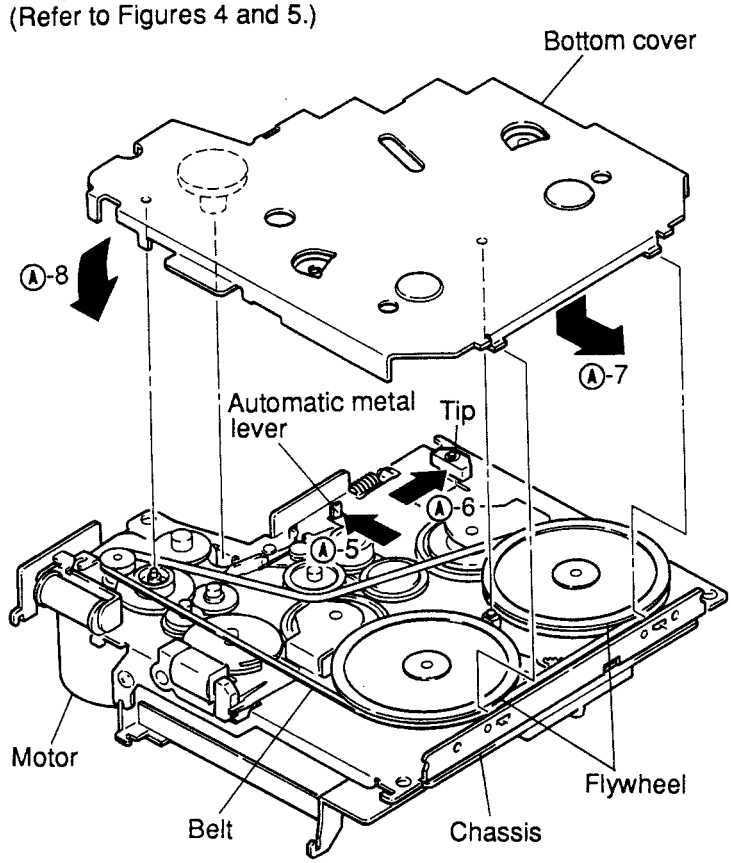

Figure 3

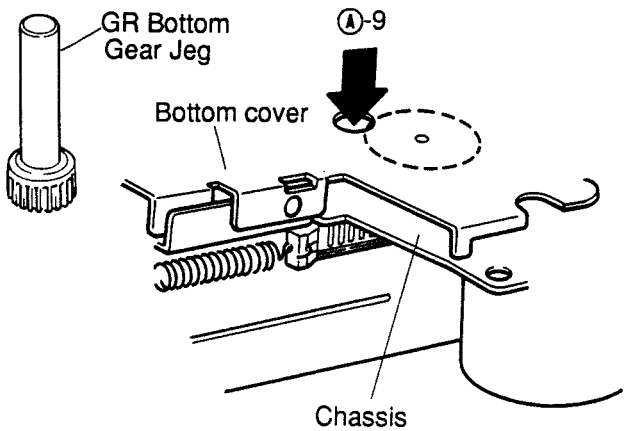

Figure 4

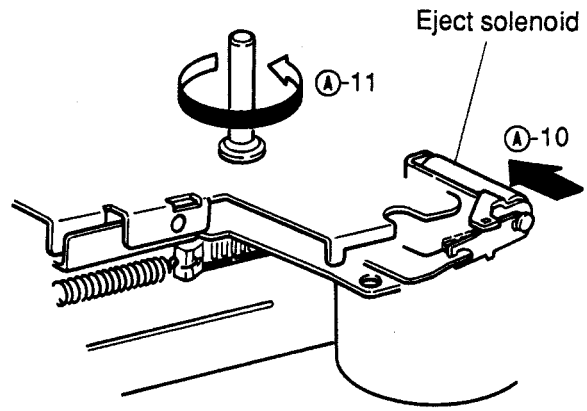

Figure 5

2. Replacement of the bottom cover mounting parts

a. Replacement of the eject gear
(1) Remove M1.2 lock washer ③ as shown in Figure 6.
(2) Pull the eject pinion out of the eject gear and remove the eject gear as shown in Figure 6.
(3) Apply the molykote E paste to the section Ⓑ-1, and mount the eject gear following the removal steps in the reverse order. After replacement is finished, make sure that the gear rotates smoothly. (Refer to Figure 6.)

Note: Do not reuse the used lock washers for remounting.
Take care to avoid damage by piercing and tearing.

b. Replacement of the RF solenoid
(1) Remove two solders ④ and remove the RF solenoid from the bottom cover by pulling it up as shown in Figure 6.
(2) Replace the solenoid with a new one, and remount it following the removal steps in the reverse order as shown in Figure 6.

Note: When removing solder ④, set the temperature of the soldering iron to 350° +/– 10° and the soldering time to 1 – 3 seconds. Take care that the solder is not loose, that there is no shortcircuit and that the coating is not damaged.

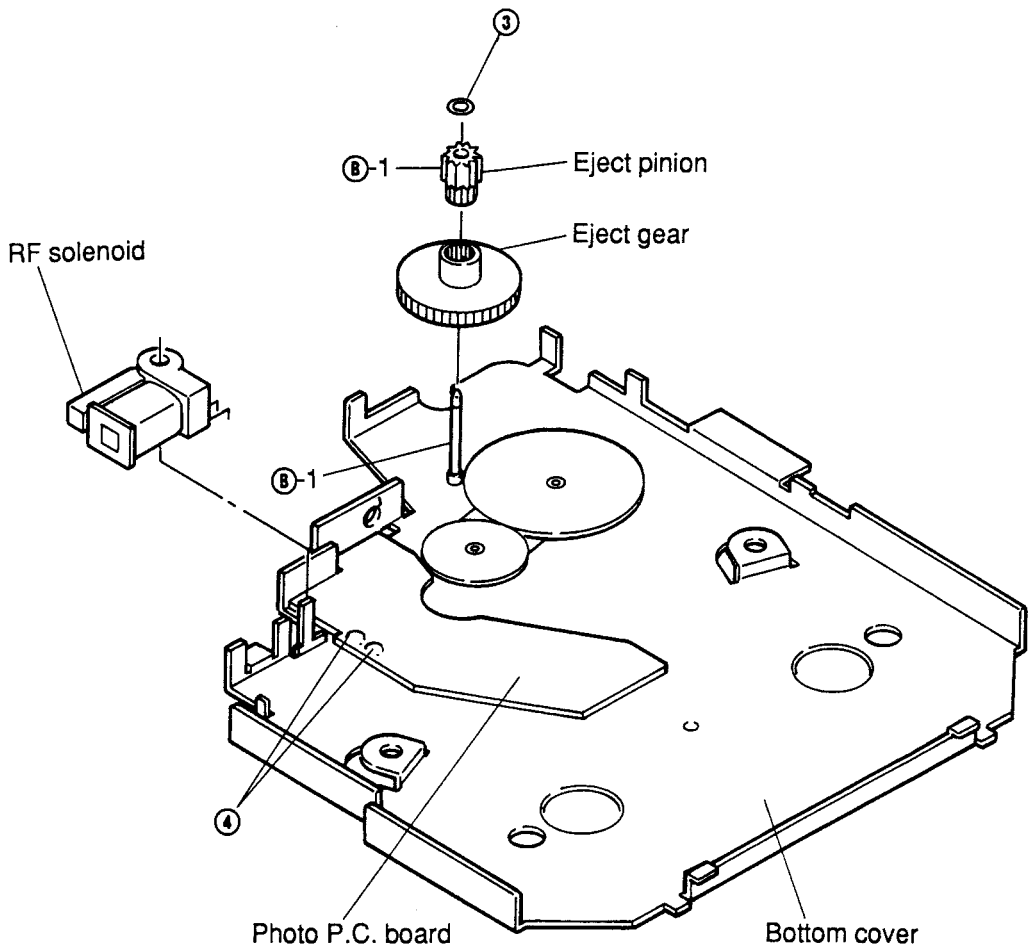

Figure 6

c. Replacement of the photo sensor
(1) Remove four solders ⑤ as shown in Figure 7.
(2) Remove the photo guide together with the photo sensor from the photo PC board as shown in Figure 7.
(3) Insert the new photo sensor into the photo guide, and bend the legs of the photo sensor in the direction marked Ⓑ-2 as shown in Figure 7.
(4) Insert the photo guide into the PC board and solder the legs so that the photo sensor is set as indicated by ⊡ in Figure 7.

Note: When using the soldering iron, set the temperature of the soldering iron to 350° +/– 10° and the soldering time to 1 – 3 seconds. Take care that the solder is not loose, that there is no shortcircuit and that the coating is not damaged. Also take care that the photo guide is properly fixed and straight.

d. Replacement of the detector switch
(Automatic metal packing ???)
(1) Remove 2 solders ⑥ with which the the switch is fixed as shown in Figure 7.
(2) Prepare the terminals of the switch of the new solder as shown in Figure 8.
(3) After that, insert the switch into the photo PC board, and solder the terminals.

Note: When using the soldering iron, refer to Item 2-C to make sure that the temperature of the soldering iron and the soldering time are proper. Also take care that the switch guide is properly fixed and straight.

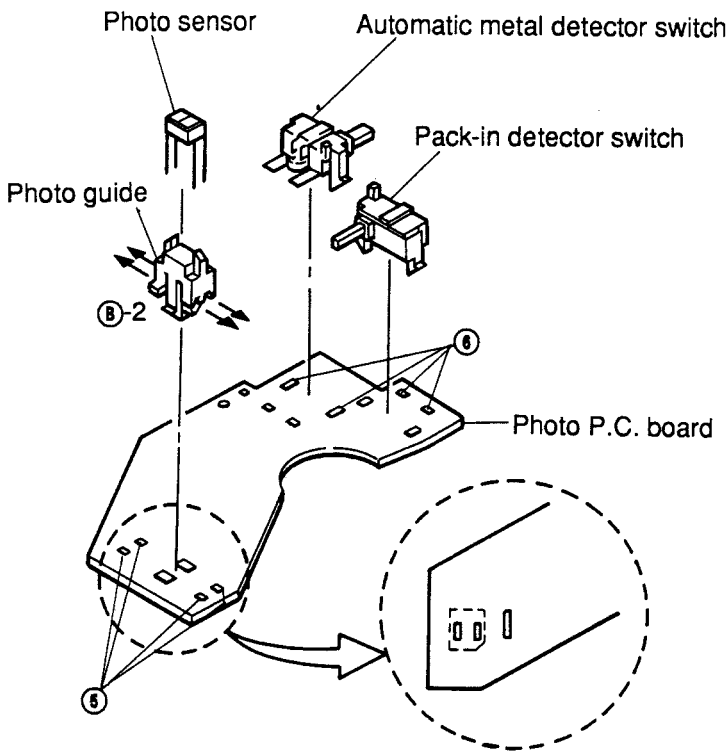

Figure 7

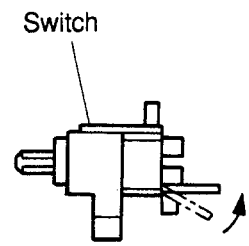

Figure 8

3. Replacement of the mounting parts on the rear of the main chassis

a. Replacement of the belt

(1) After removing the bottom cover, remove the belt.
(2) Clean the new belt with absolute alcohol, and fix it as shown in Figure 9.

Note: When fixing the belt, make sure that it is not twisted or dirty. When removing the belt, do not turn up the front of the chassis.

b. Replacement of the motor

(1) After removing the belt, remove spring ⑦ as shown in Figure 10.
(2) Remove solder ⑧-1, and remove the parallel wire (5P) from the control PC board as shown in Figure 11.
(3) Remove two screws ⑨ and ⑩, and remove the motor, taking care not to damage the motor idler gear. (Refer to Figure 10.)
(4) Mount the new motor following the removal steps in the reverse order.

Note: Refer to Item 2-C to make sure that the temperature of the soldering iron and the soldering time are proper. Since the parallel wire is very easily damaged, handle it with care.
Fasten the two screws with a fastening torque of 3 kg.cm.

*When inserting the clutch spring, be careful of the inserting direction as shown in the Figure.

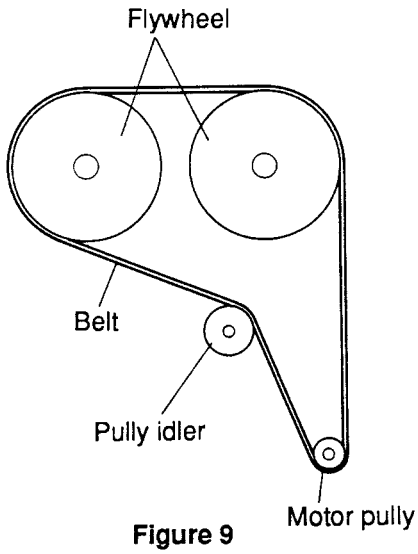

Figure 9

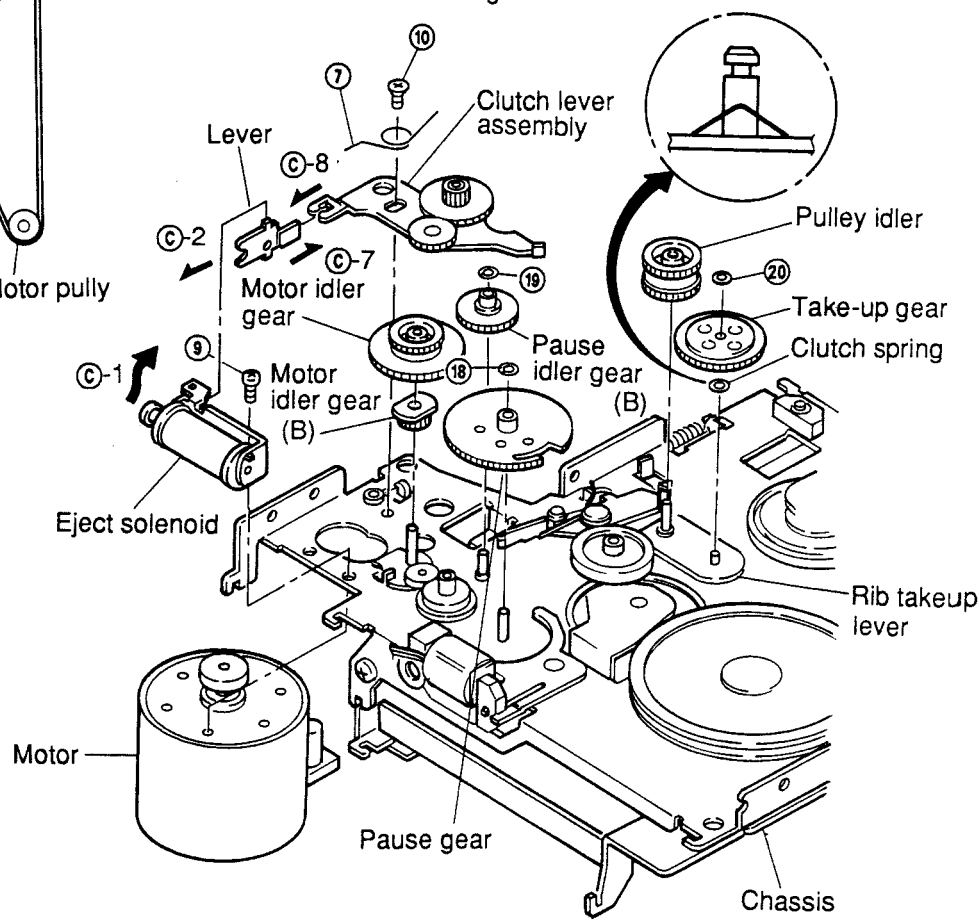

Figure 10

c. Replacement of the flywheels
   (1) After removing the belt, pull out the two flywheels. Take care not to loose the polyslider washer ⑪ located between the flywheel and the chassis. (Refer to Figure 12.)
   (2) Fix the polyslider washer to the new flywheel and mount the flywheel to the chassis.

d. Replacement of the play solenoid
   (1) Remove the two solders ⑧-2 as shown in Figure 11.
   (2) Remove one screw ⑫ and remove the solenoid as shown in Figure 11.
   (3) Mount the new solenoid following the removal steps in the reverse order.

   Note: Refer to Item 2-C to make sure that the temperature of the soldering iron and the soldering time are proper. Fasten the screws with a fastening torque of 2.3 kg.cm.

e. Replacement of the eject solenoid
   (1) Remove two solders ⑧-3. Take care not to loose the tube that protects the wire. (Refer to Figure 11.)
   (2) Remove screw ⑨ and remove the play solenoid as shown in Figure 10.
   (3) Align position ⓒ-1 of the new solenoid with position ⓒ-2 of the lever and fasten the screws as shown in Figure 10.
   (4) Lead the wire through the tube and solder it.

   Note: Refer to Item 2-C to make sure that the temperature of the soldering iron and the soldering time are proper. Fasten the screws with a fastening torque of 3 kg.cm. As the solder wires are not insulated, do not let them cross each other.

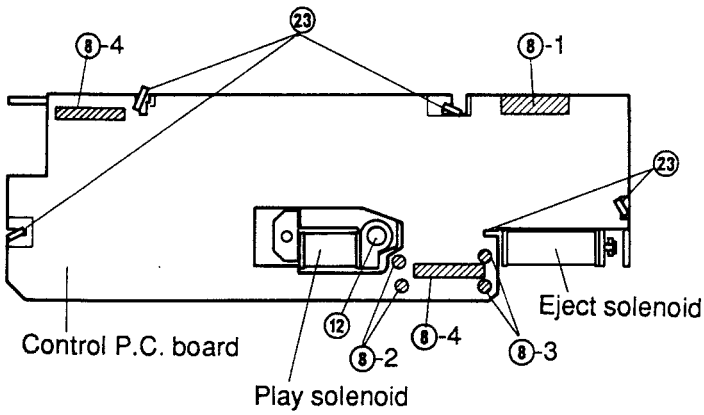

Figure 11

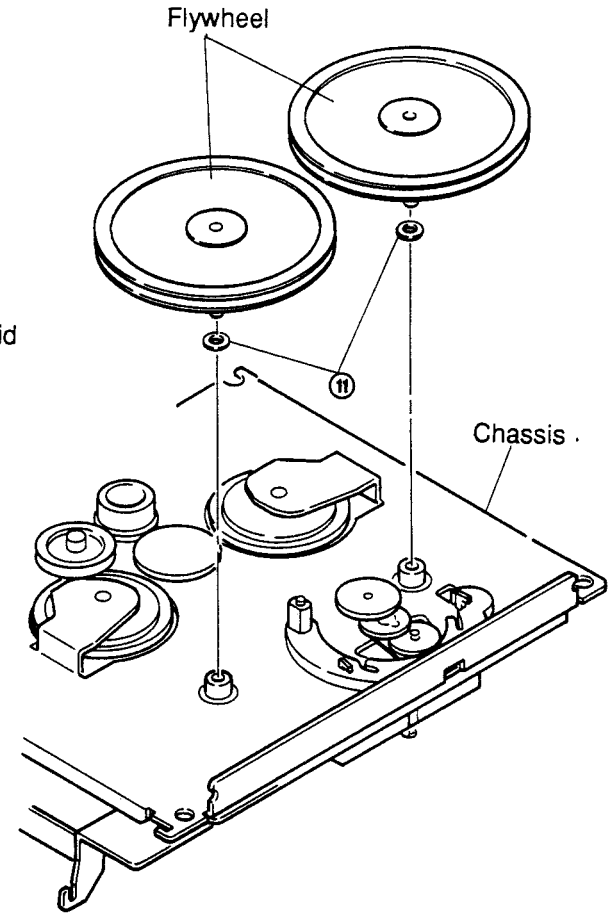

Figure 12

f. Replacement of gears

(f-1) Replacement of the reverse idler gear

(1) Remove M1.2 lock washer ⑬, pull it up from the stud of the chassis and remove the gear as shown in Figure 13.

(2) Remount following the removal steps in the reverse order.

(f-2) Replacement of the sun gear

(1) Remove M1.2 lock washer ⑭, pull it up from the stud of the chassis and remove the gear as shown in Figure 13.

(2) Mount it, following the removal steps in the reverse order.

(f-3) Replacement of the fixing gear

(1) Adjust the two mounting claws for the fix gear on the chassis ⑮ and remove the section ⓒ-3 of the gear by pulling it up in the direction of the arrow shown in Figure 13.

(2) Insert the section ⓒ-4 of the new gear into the chassis, and mount it following the removal steps in the reverse order as shown in Figure 13.

(f-4) Replacement of the reverse lever assembly and planet gear

(1) Remove both the fixing gear and the sun gear and remove the reverse lever assembly as shown in Figure 13.

(2) Remove M1.7 lock washer ⑯ and remove the planet gear as shown in Figure 14.

(3) Mount the new planet gear and reverse lever following the removal steps in the reverse order.

Notes on f-1 through f-4:

After mounting all parts, check if the reverse lever assembly moves in the directions marked ⓒ-5 when the reverse gear is turned clockwise and counterclockwise.

*After mounting the fixing gear, bend them into the form of as shown in the Figure.

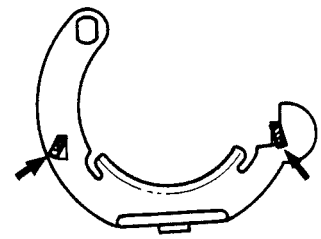

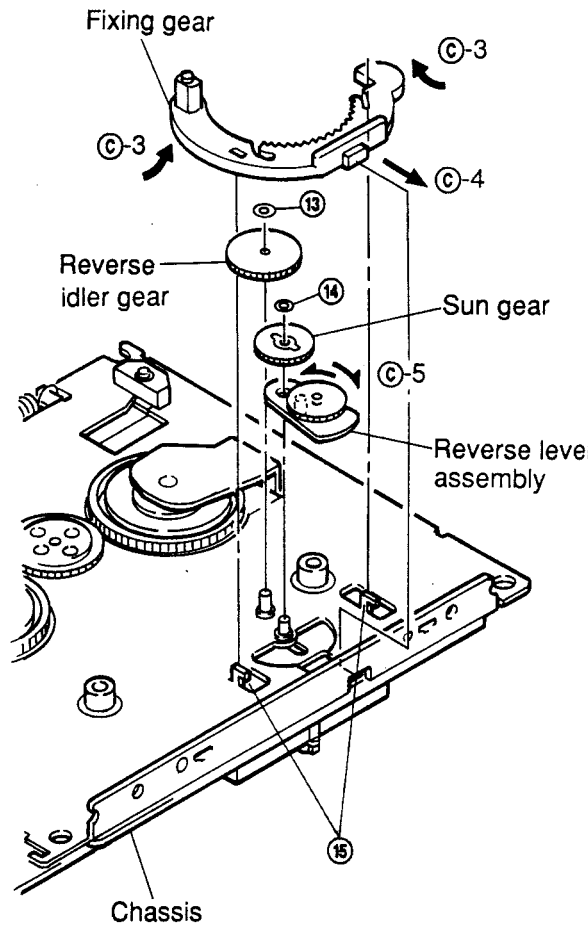

Figure 13

(f-5) Replacement of the clutch lever assembly and eject idler gear
(1) After removing the motor, remove the motor idler gear and the motor idler gear (B) and remove the clutch lever assembly as shown in Figure 10.
(2) Remove M1.2 lock washer ⑰ and remove the eject idler gear as shown in Figure 15.
(3) Mount the new gears and clutch lever following the removal steps in the reverse order.

Note: When mounting the gears to the lever, apply grease (FLOIL 425A) to the position ⓒ-6 as shown in Figure 15. Align the position ⓒ-7 with the position ⓒ-8 and mount the clutch lever as shown in Figure 10.

(f-6) Replacement of the pause gear
(1) Remove M1.2 lock washer ⑱ and remove the pause gear pulling it up from the stud of the chassis as shown in Figure 10.
(2) Mount the new gear following the removal steps in the reverse order.

(f-7) Replacement of the pause idler gear (B)
(1) After removing the motor and the motor idler gear, remove M1.2 lock washer ⑲ and remove the gear by pulling it up from the stud of the chassis as shown in Figure 10.
(2) Mount the new gear by following the removal steps in the reverse order.

(f-8) Replacement of the take-up gear
(1) After removing the belt and the pulley idler gear, remove M1.2 lock washer ⑳ by pulling it up from the stud of the rib take-up lever assembly as shown in Figure 10.
(2) Remount the take-up gear following the removal steps in the reverse order.

Notes on f:
Do not reuse the used washers. Take care to avoid damage by piercing and tearing.

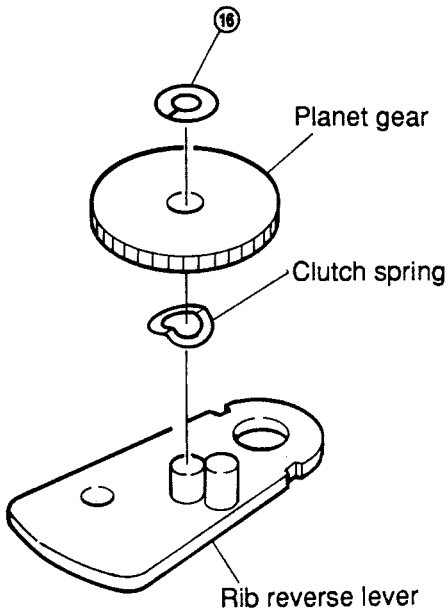

[Disassembly Reverse Lever Assembly]

Figure 14

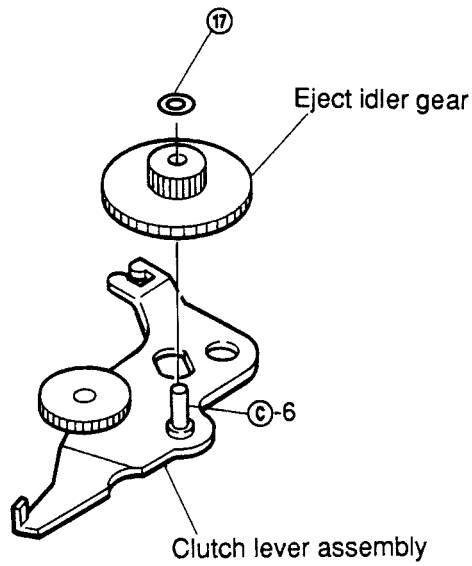

Figure 15

4. Replacement of the parts mounted on the front of the chassis

a. Replacement of the audio PC board
(1) Remove two solders ㉑ and remove the parallel wire (7P) and the head PC board as shown in Figure 16.
(2) Adjust the two claws ㉒ to the rectangular holes on the PC board and remove the PC board as shown in Figure 16.
(3) After replacement, mount the new PC board following the removal steps in the reverse order.

Note: The head PC board and the parallel wires are easily damaged. Handle them with care. Refer to Item 2-C to make sure that the temperature of the soldering iron and the soldering time are proper. Do not bring the soldering iron near the head PC board.

b. Replacement of the control PC board
(1) Remove seven solders ⑧ and remove the three parallel wires and the wires of the eject solenoid and of the play solenoid as shown in Figure 11.
(2) Remove the claws ㉓ and remove the PC board as shown in Figure 11.
(3) After replacing the old PC board with a new one, mount it following the removal steps in the reverse order.

Note: As mentioned in Item 4-a, handle the parallel wires carefully, and be sure that the temperature of the soldering iron and the soldering time are proper. As the wires of the eject solenoid are not insulated, do not let them cross each other.

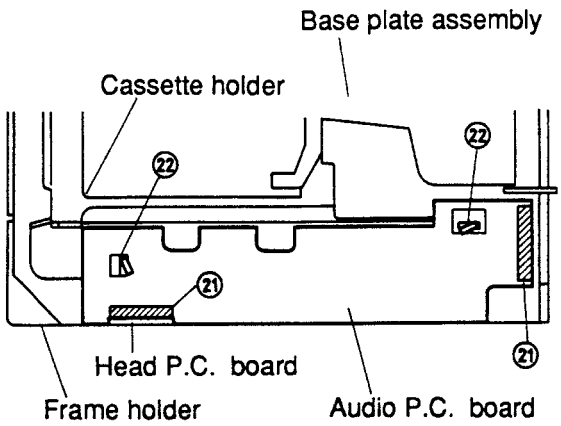

Figure 16

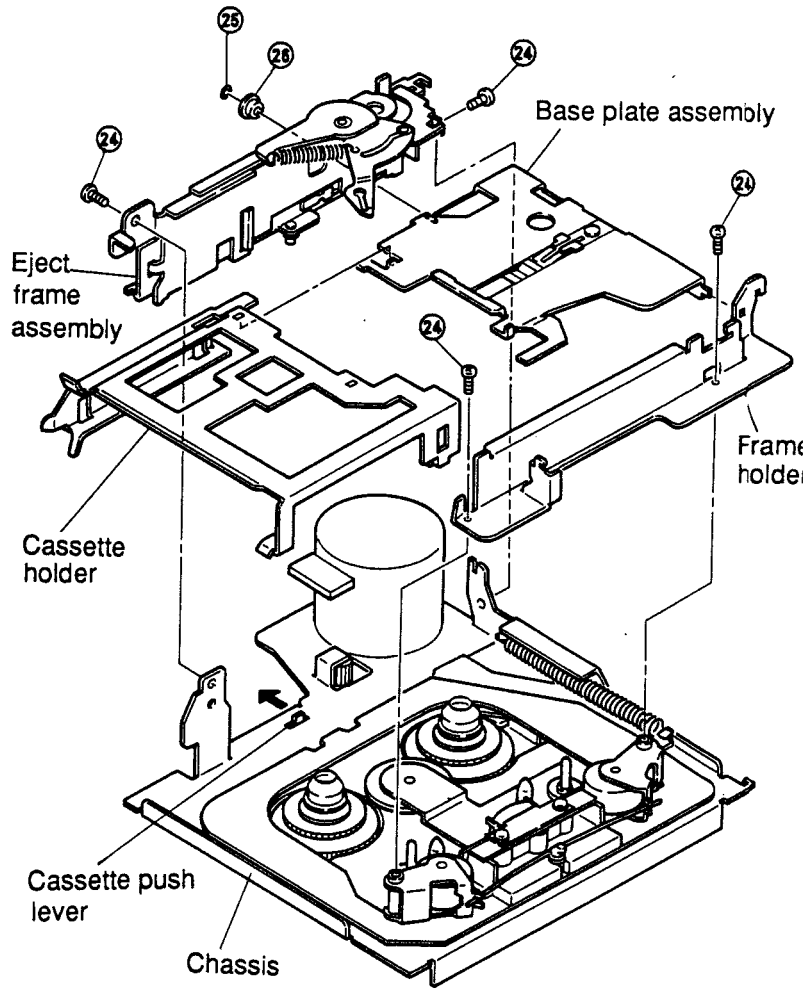

Figure 17

c. Disassembly and assembly of the cassette holder
(1) Remove four screws ㉔ and remove the eject frame assembly and the frame holder as shown in Figure 17.
(2) Remove M1.2 lock washer ㉕ and plate base roller ㉖ and remove the cassette holder and the base plate assembly as shown in Figure 17.
(3) Remount them following the removal steps in the reverse order.

Notes: 1. When mounting the cassette holder and the base plate, insert the slider shaft into the eject arm and fix them turning the slider shaft in the direction indicated by the arrow in the figure. Make sure that the cassette holder and the base plate are in the cassette-in mode during this operation. (Refer to Figure 18).
2. When mounting the eject frame assembly, push the cassette push lever in the direction indicated by the arrow in the Figure 17.
3. When mounting the base plate assembly and the eject frame assembly, or when mounting the eject frame assembly to the chassis, do not apply excessive force to avoid deformations of the eject arm and the frame.
4. Do not reuse the used washers. Take care to avoid damage by piercing and tearing.

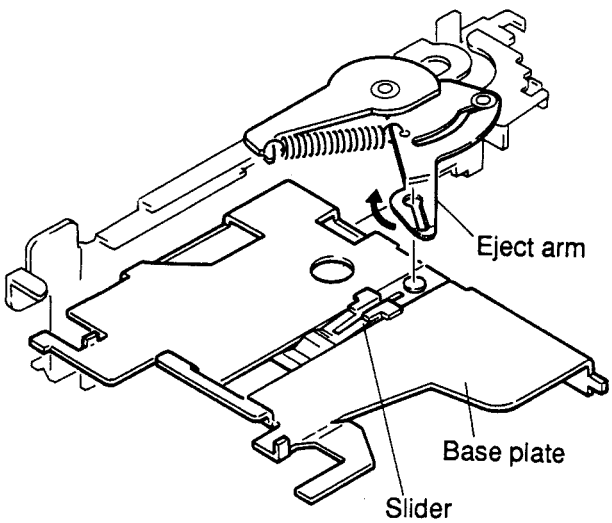

Figure 18

d. Replacement of the reels
(1) Remove M1.7 lock washers ㉖ (Refer to figure 19).
(2) Move the select lever in the direction marked Ⓓ-1 in the Figure and remove the reel by gripping the reel gear as shown in Figure 19.
(3) After replacement, mount the new reels following the removal steps in the reverse order.
(4) After mounting, check the tape speed and the wow and flutter with test tape MTT-III.

Note: Since the reel is easily loosened if the cap is gripped, always handle it gripping the gear. Do not reuse the used washers. Take care to avoid damage by piercing and tearing.

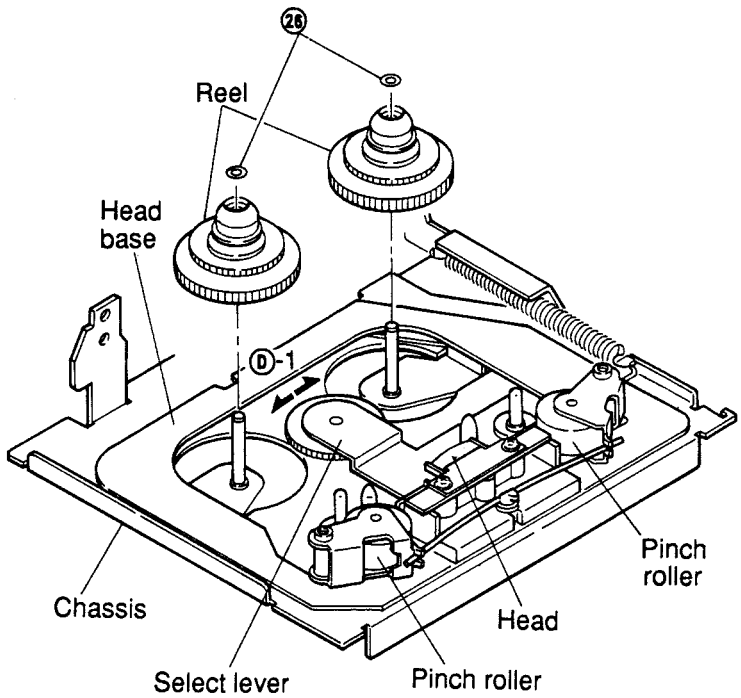

Figure 19

e. Replacement of the pinch rollers

(1) Remove pinch roller spring ㉗ as shown in Figure 20.

(2) Remove M3.1 lock washers ㉘ and remove the pinch roller as shown in Figure 20.

(3) Mount the pinch rollers following the removal steps in the reverse order.
Apply insulation coating to the position Ⓓ-2 of the pinch roller as shown in Figure 20.

Note: Make sure that the pinch rollers are thoroughly fixed and that they are not deformed. Do not reuse used lock washers. Take care to avoid damage by piercing and tearing.

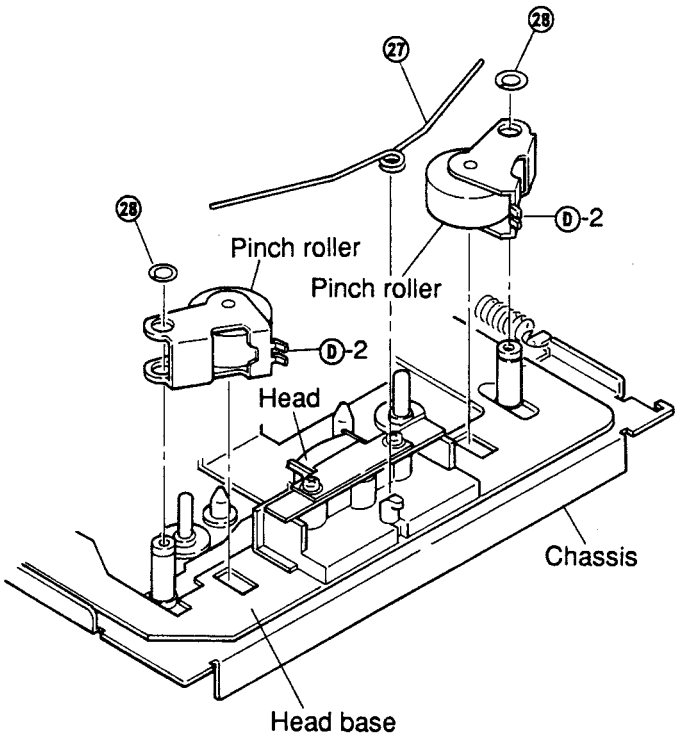

Figure 20

f. Replacement of the head

(1) After removing the pinch roller spring, remove two screws ㉙ as shown in Figure 21.

(2) Remove solder ㉚ and remove the head from the head PC board as shown in Figure 22.

(3) After replacement, mount the new head following the removal steps in the reverse order.

Notes: 1. Refer to Item 2-C to make sure that the temperature of the soldering iron and the soldering time are proper. Do not bring the soldering iron near the head PC board. Make sure that the head PC board is not lifted.

2. Fasten the two screws with a fastening torque of 2.3 kg.cm. Note that the tension of the head spring can be decreased if the screws are fastened too strongly.

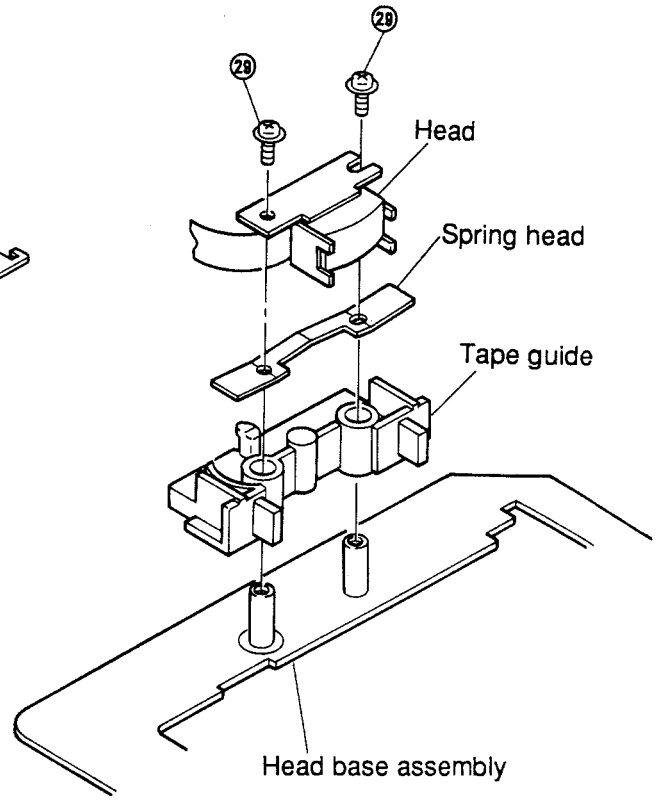

Figure 21

(4) Adjust the height of the head as shown in Figures 23, 24 and 25.

① Place the height adjustment gauge (M-300 or AT-500) on the head base, and adjust the height so that the check bar fits in the tape head guide smoothly.

② When the check bar touches the top (or bottom) of the tape guide, insert a spacer (t 0.1 mm or polislider washer t 0.13 mm).
If necessary, remove the spacer.

Note: If you do not have a height gauge like described in ④-①, run the tape at normal speed and adjust the height of the head and the tape head guide so that the tape does not curl.

(5) After having assembled the complete mechanism, adjust the angle of the head with test tape MTT-113C. (Refer to chapter "Adjustment of the head angle".) After the adjustment, apply the screw lock and fix the screws.

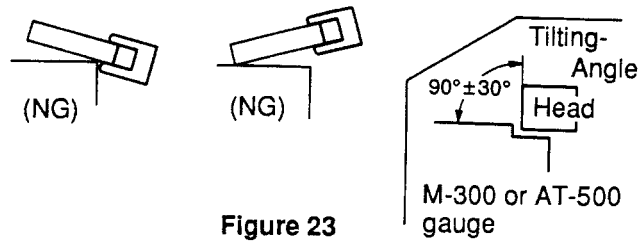

Figure 23

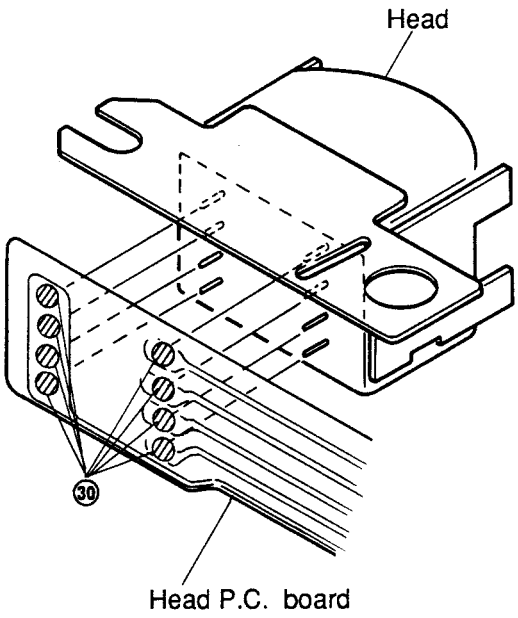

Figure 22

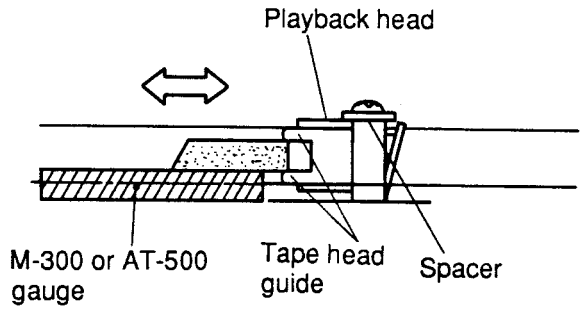

Figure 24

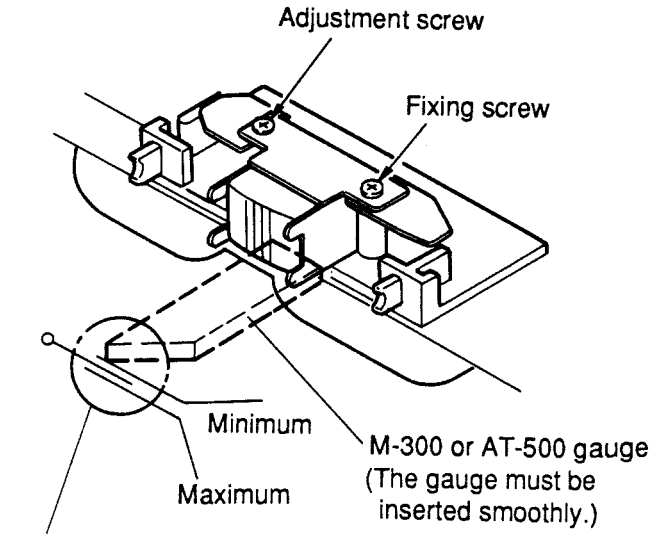

Figure 25

Exploded View (Cassette Deck)

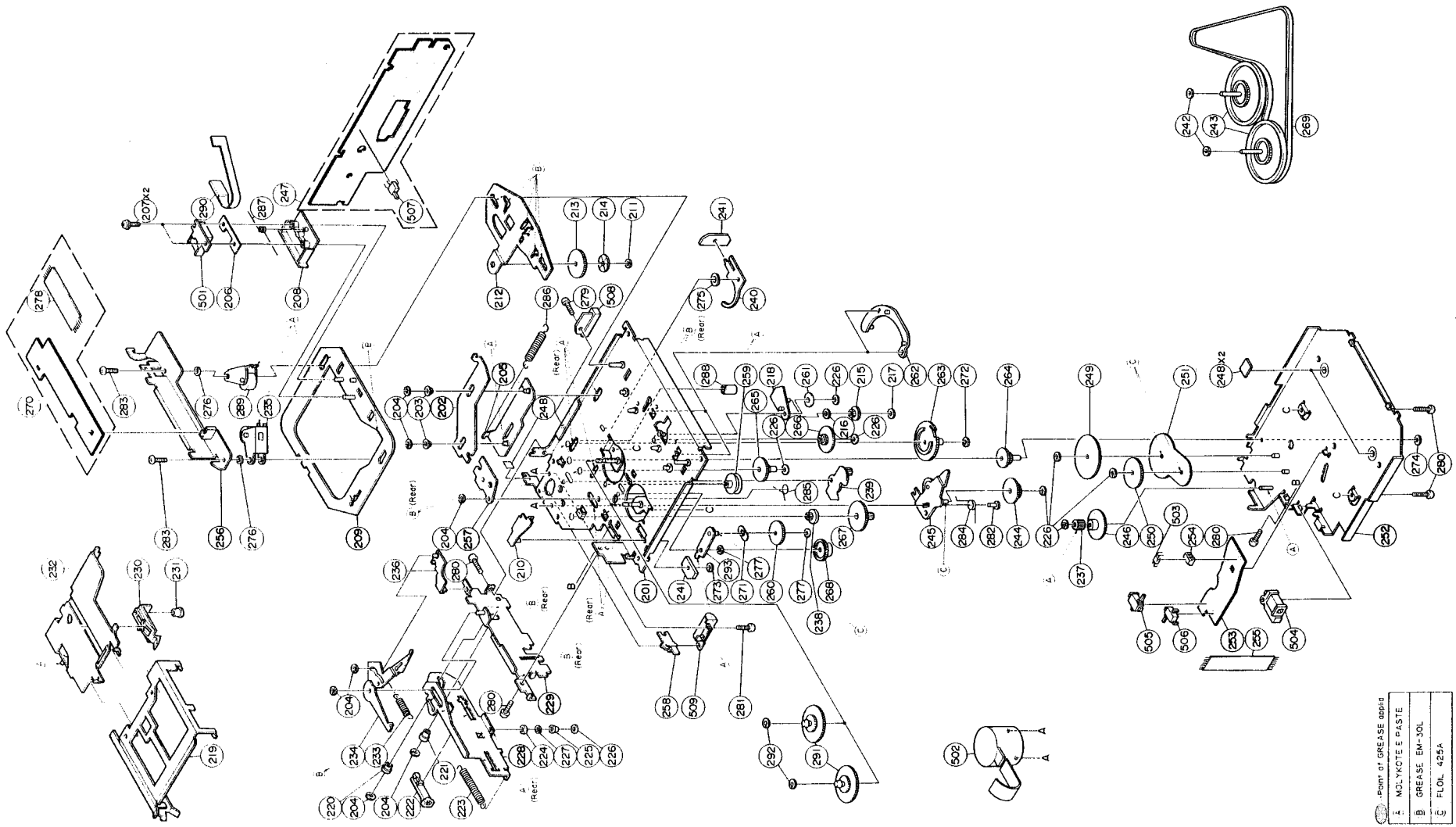

Cassette Deck Assembly Parts List

Note : The parts without part numbers are not supplied.

Symbol No.	IN-dex	Part No.	Description		
203	3-C	43A11072W01	Roller, Sub Head		
204		04A41345P01	Washer, Lock(M1.2)		
206	2-B	41A10095W01	Spring, Head		
207	2-B	03S40019G03	Screw, F-Locks(M2x4)		
208	2-B	43B12545W01	Tape, Guide		
210	4-C	01A10206W01	Assy.,Riv Lever R/F Sol		
211	2-D	04A41345P29	Washer, Lock(M2.6)		
213	2-D	44A10295W01	Gear, Sensor		
214	2-D	14A10681W01	Reflector		
215	3-E	44A10142W01	Gear, Planet		
216	3-E	41A10097W02	Spring, Clutch		
217	3-E	04A41345P31	Washer, Lock(M1.7)		
218	3-E	01A10203W01	Assy., Riv Lever Reverse		
219	4-B	07B10074W01	Holder, Cassette		
220	5-B	43A12583W01	Roller, Eject		
221	5-C	43A63281F01	Roller, Plate Base		
222	5-C	44A82206F01	Rack		
223	5-C	41B10386W03	Spring, GR(Rack)		
224	4-C	43A10121W01	Roller, Eject A		
225	4-D	43A10360W01	Roller, Eject B		
226		04A41345P11	Washer, Lock(M1.2)		
227	4-D	43A12377W01	Roller, Eject C		
230	4-A	45B10376W01	Slider		
231	4-B	47A63278F01	Shaft, Slider		
232	4-A	01A10212W01	Assy.,Riv Plate Base		
233	4-C	41B10386W01	Spring, Eject Arm		
234	4-B	01A10148W01	Assy., Riv Eject Arm A		
235	3-B	01B10381W02	Assy., Pinch Roller		
236	4-C	01A10202W01	Assy., Riv Lever Pack in SW		
237	4-F	44A12975W01	Pinion, Eject		
238	4-E	44A13817W01	Gear, Motor Idler(B)		
239	3-E	01A10201W01	Assy., Riv Lever Pause		
240	2-D	45A10092W01	Lever, Play		
241		76T10374W01	Chip		
242	1-G	04S40075G05	Washer Polyslider (M2.1)		
243	1-G	01A10368W01	Assy., Flywheel		
244	3-F	44A10141W01	Gear, Eject Idler		
245	3-E	01A10205W01	Assy., Riv Lever Clutch A		
246	3-F	44A10145W01	Gear, Eject		
247	2-B	01V11500W18	Assy., GR Control		

Symbol No.	IN-dex	Part No.	Description		
248		43A90918F01	Spacer, Polyslider		
249	3-F	44A11063W01	Gear, Bottom A		
250	3-F	44A11064W01	Gear, Bottom B		
251	3-G	04A11122W01	Washer, GR		
254	3-G	15B11065W01	Guide, Photo		
255	4-G	30T15126W01	Wire, PC Sensor(7P)		
258	4-D	45A10101W01	Lever, Eject Sol		
259	3-D	49A10131W01	Pulley, Idler		
260	4-E	44A10133W01	Gear, Take Up		
261	3-E	44A10134W01	Gear, Sun		
262	3-E	44B10135W01	Gear, Fix		
263	3-E	44B10136W01	Gear, Pause		
264	3-F	44A10137W01	Gear, Pause Idler A		
265	3-D	44A10379W01	Gear, Pause Idler B		
266	3-E	44A10138W01	Gear, Reverse Idler		
267	3-E	44A10139W01	Gear, Motor Idler		
268	4-E	44A11062W01	Gear, Reel Idler		
269	1-G	42A10380W01	Belt, GR		
● 270	3-A	01V14700W68	Assy., GR Audio		
■ 270	3-A	01V11500W19	Assy., GR Audio		
▲ 270	3-A	01V11500W19	Assy., GR Audio		
271	4-D	41A10097W02	Spring, Clutch		
272	3-F	04A41345P15	Washer, Lock(M1.2)		
273	4-D	04A41345P02	Washer, Lock(M1.7)		
274	3-H	04A41345P17	Washer, Lock(M1)		
275	2-D	04A41345P30	Washer, Lock(M3.1)		
276	3-B	04A41345P32	Washer, Lock(M3.1)		
277		04A41345P06	Washer, Lock(M2.1)		
278	2-A	30T15126W02	Wire, PC Joint 7P		
279	2-D	03S44205G78	Screw, Pan(M2x6)		
280		03S44205G30	Screw, Pan(M2.6x4)		
281	4-D	03S72235F38	Screw, Pan(M2x3.3)		
282	3-F	03A12132W02	Screw, Eject Clutch (M2x2.3)		
283		03S43997P64	Screw, Pan(M1.7x3)		
284	3-F	41A10384W01	Spring, Eject Clutch		
285	3-E	41A10385W01	Spring, Cas Push		
286	2-C	41B10386W02	Spring, Sub Head		
287	2-B	41A10387W01	SP, Pinch Roller		
288	3-D	43A12719W01	Roller, Pause		
289	3-B	01B10381W01	Assy., Pinch Roller		

Notes : ● ; For GR75E020 model only ■ ; For GR75E010 model only
▲ ; For GR75E01A model only Others ; Common

	Symbol No.	IN-dex	Part No.	Description		
	290	2-B	84T10367W01	Panel, Head		
●	291	4-E	01T15164W01	Assy., Reel		
■	291	4-E	01T15164W01	Assy., Reel		
▲	291	4-E	01T15164W02	Assy., Reel		
	292	4-E	04A41345P12	Washer, Lock(M1.7)		
	293	4-D	01A11078W01	Assy., Riv Lever Take Up		
				Miscellaneous		
●	501	2-B	88T15971W01	Head		
■	501	2-B	88T10373W01	Head		
▲	501	2-B	88T10373W01	Head		
	502	4-E	01V11500W64	Assy., Motor		
	503	3-G	51T15144W01	Sensor, Photo		
	504	4-G	01T10371W01	R/F Sol. Assy.		
	505	4-F	40T15382W01	SW., Detector (Pack Down)		
	506	4-G	40T15382W01	SW., Detector(Metal)		
	507	2-C	40T15222W01	SW., Detector (Pack In)		
	508	2-D	01T15249W01	Assy., Play Solenoid		
	509	4-D	01T10369W01	Assy., Eject Solenoid		

Notes : ● ; For GR75E020 model only ■ ; For GR75E010 model only
▲ ; For GR75E01A model only Others ; Common

293

ALPINE®

SERVICE MANUAL

Cassette Deck Mechanism

ADDENDUM & REVISED(V)

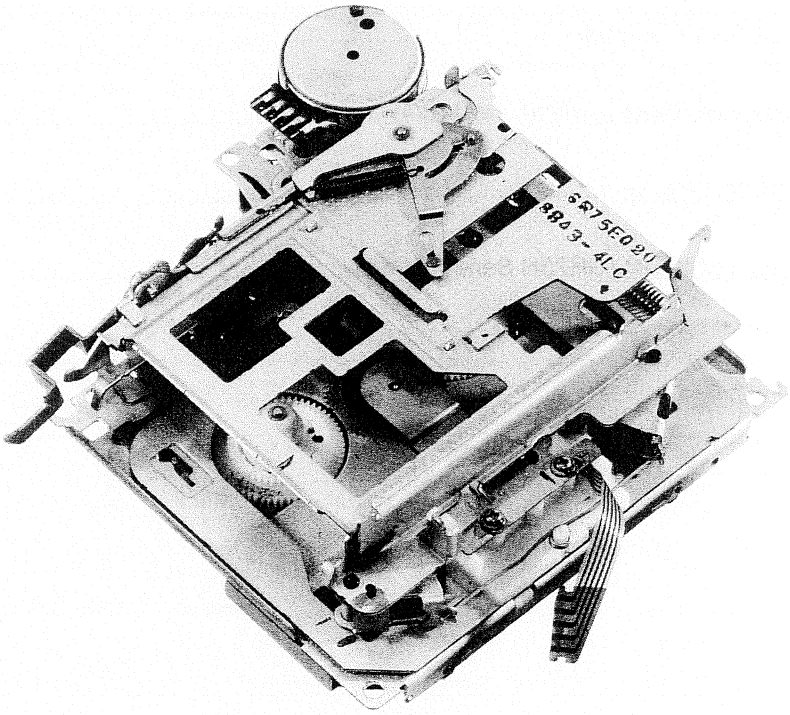

GR/GR-Y SERIES

Contents

List of Usable Lock Washers 3

List of Usable Oil 3

List of Usable Jigs 3

Disassembly, Assembly and Replacement of Functional Parts ..... 5 to 16

Exploded View (GR75E Series) (1/4) ..... 17 to 18

Cassette Deck Assembly Parts List (GR75E Series) (1/4) ..... 19 to 20

Exploded View (GR75L Series) (2/4) ..... 21 to 22

Cassette Deck Assembly Parts List (GR75L Series) (2/4) ..... 23 to 24

Exploded View (GR-Y Series) (3/4) ..... 25 to 26

Cassette Deck Assembly Parts List (GR-Y Series) (3/4) ..... 27 to 28

Exploded View (GR75H Series) (4/4) ..... 29 to 30

Cassette Deck Assembly Parts List (GR75H Series) (4/4) ..... 31 to 32

List of Usable Lock Washers

	SIZE	PARTS NO.	QUANTITY			
			GR75E Series	GR75L Series	GR-Y Series	GR75H Series
1	(M1.2 × 3.5 × 0.25)	04B41345P01	4	4	4	2
2	(M1.7 × 3.5 × 0.25)	04B41345P02	1	1	1	4
3	(M1.2 × 2.5 × 0.25)	04B41345P11	8	8	8	9
4	(M1.7 × 3.5 × 0.35)	04B41345P12	2	2	2	2
5	(M1.2 × 3.5 × 0.35)	04B41345P15	2	2	2	2
6	(M1 × 2.5 × 0.25)	04B41345P17	1	1	1	2
7	(M2.6 × 5 × 0.25)	04B41345P29	1	1	1	1
8	(M3.1 × 8 × 0.05)	04B41345P30	1	1	1	1
9	(M3.1 × 5 × 0.35)	04B41345P32	2	2	2	2
10	(M1.2 × 2.5 × 0.3)	04B41345P34	1	1	1	0
11	(M1.7 × 2.8 × 0.25)	04B41345P35	1	1	1	2
12	(M2.1 × 4 × 0.25)	04B41345P37	1	1	1	0
13	(M2.1 × 4 × 0.13)	04S40075G05	2	2	2	0
14	(M2.1 × 4 × 0.3)	04S40075G58	0	0	0	1

List of Usable Oil

1) Molykote G paste
2) Grease EM-30L
3) Grease PG-671

List of Usable Jigs

1) GR bottom gear jig (Part No. 44A20788W01)
2) Head height adjustment gauge
   AI-500 (Part No. AI-500)

Memo

Disassembly, Assembly and Replacement of Functional Parts

1. Disassembly and Assembly of Bottom Cover

(1) Turn the mechanism around as shown in Figure 1.
(2) Remove M1 lock washer ① as shown in Figure 1.
(3) Remove three screws ② as shown in Figure 1.
(4) Lift the bottom cover slowly from the position Ⓐ-1, pull the hooks out of the holes in the chassis, and remove the bottom cover as shown in Figure 1.
(5) When remounting the bottom cover, first turn the front of the mechanism up as shown in Figure 2.
(6) Slide the slider in the direction Ⓐ-2 as shown in Figure 2.
(7) Push down the cassette holder in the direction Ⓐ-3 as shown in Figure 2.
(8) Pull the door pin in the direction Ⓐ-4 so that the mechanism is locked in as shown in Figure 2.
(9) Turn the mechanism around as shown in Figure 3.
(10) Pull the automatic metal lever in the direction Ⓐ-5 and the RF solenoid chip in the direction Ⓐ-6 as shown in Figure 3.
(11) Insert the hooks of the bottom cover into the chassis in the direction Ⓐ-7, and then join the part Ⓐ-8 of the bottom cover to the chassis slowly, making sure that the 3 points indicated with the straight lines in the Figure 3 are fitted properly.
If there are troubles in mounting the bottom cover, do not apply force but remove the bottom cover once again and check the positions of the individual parts. (Refer to Figure 3.)
(12) Since the hooks marked Ⓐ-8 will be lifted slightly as shown in Figure 4, insert the jig through the hole Ⓐ-9, and fix it turning the jig slightly in the direction Ⓐ-11.
Instead of operation (12), turn the gear nose slowly with a precision screwdriver etc., taking care not to damage it.
After 2 to 3 turns, it will click into place.
(Refer to Figures 4 and 5.)
(13) Fix the screws and the lock washer that have been removed.

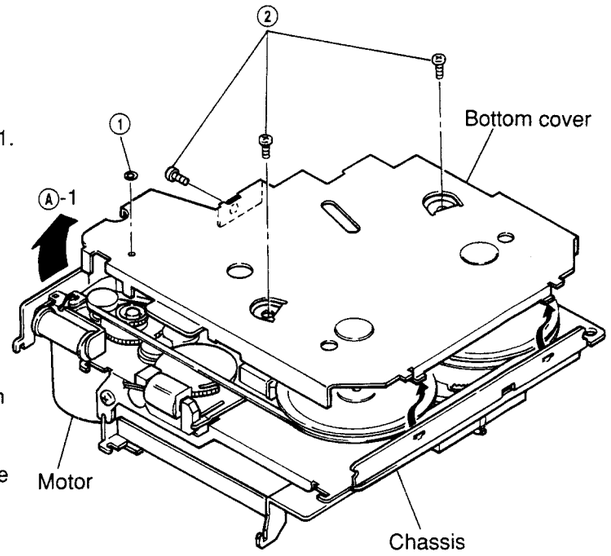

Figure 1

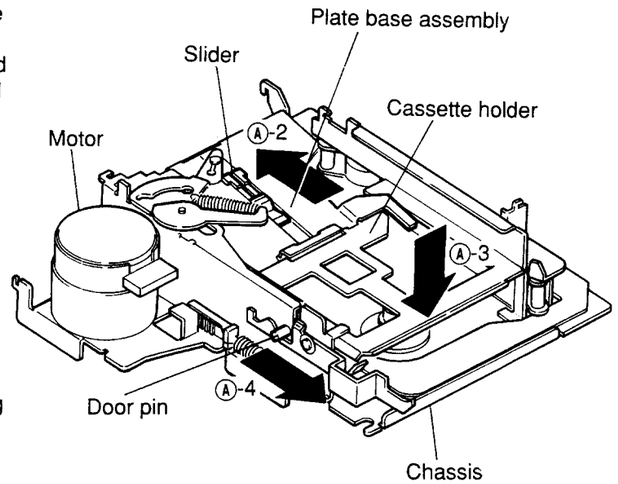

Figure 2

(14) Insert the jig into the hole Ⓐ-9 as shown in Figure and rotate the eject solenoid counterclockwise about 20 times, pulling it in the direction Ⓐ-10 with the finger.
Then the eject operation is completed.
Instead of operation (14), the eject operation can be performed by mounting the mechanism to the product. (Refer to Figures 4 and 5.)

Note: Do not reuse the used lock washers for mounting.
When turning the mechanism, be careful not to drop the gear and the flywheel.
Fasten the three screws with a fastening torque of 6 kg.cm.

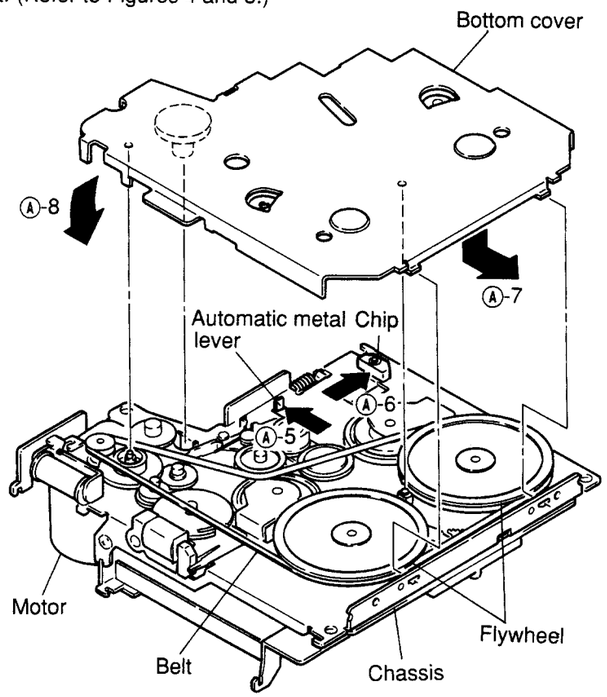

Figure 3

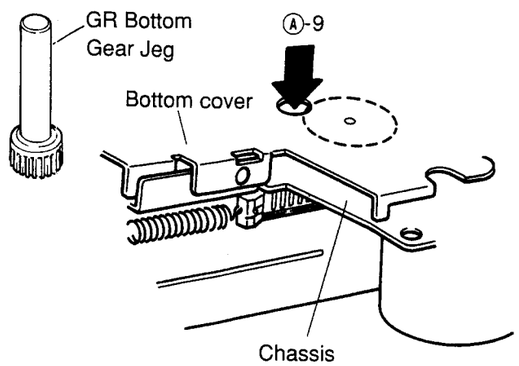

Figure 4

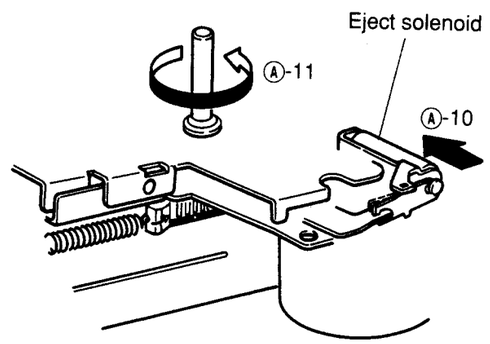

Figure 5

GR/GR-Y Series

2. Replacement of the bottom cover mounting parts

a. Replacement of the eject gear
(1) Remove M1.2 lock washer ③ as shown in Figure 6.
(2) Pull the eject pinion out of the eject gear and remove the eject gear as shown in Figure 6.
(3) Apply the molykote E paste to the section Ⓑ-1, and mount the eject gear following the removal steps in the reverse order. After replacement is finished, make sure that the gear rotates smoothly. (Refer to Figure 6.)

Note: Do not reuse the used lock washers for remounting.
Take care to avoid damage by piercing and tearing.

b. Replacement of the RF solenoid
(1) Remove two solders ④ and remove the RF solenoid from the bottom cover by pulling it up as shown in Figure 6.
(2) Replace the solenoid with a new one, and remount it following the removal steps in the reverse order as shown in Figure 6.

Note: When removing solder ④, set the temperature of the soldering iron to 350° ± 10° and the soldering time to 1 – 3 seconds. Take care that the solder is not loose, that there is no shortcircuit and that the coating is not damaged.

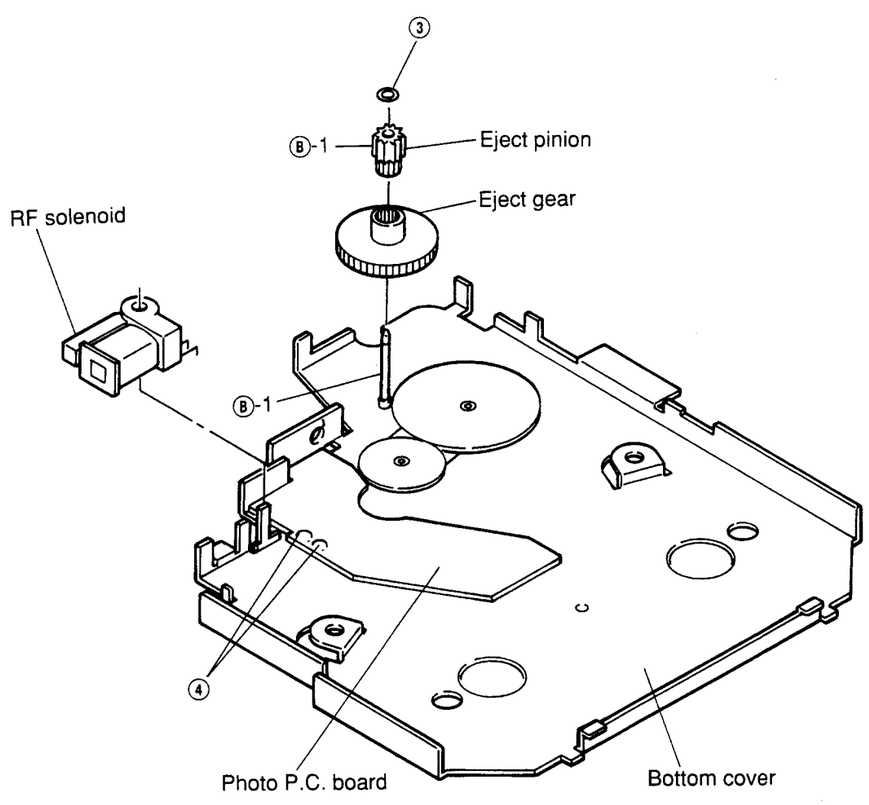

Figure 6

c. Replacement of the photo sensor
(1) Remove four solders ⑤ as shown in Figure 7.
(2) Remove the photo guide together with the photo sensor from the photo P.C. board as shown in Figure 7.
(3) Insert the new photo sensor into the photo guide, and bend the legs of the photo sensor in the direction marked Ⓑ-2 as shown in Figure 7.
(4) Insert the photo guide into the P.C. board and solder the legs so that the photo sensor is set as indicated by ⊡ in Figure 7.

Note: When using the soldering iron, set the temperature of the soldering iron to 350° ± 10° and the soldering time to 1 – 3 seconds. Take care that the solder is not loose, that there is no shortcircuit and that the coating is not damaged. Also take care that the photo guide is properly fixed and straight.

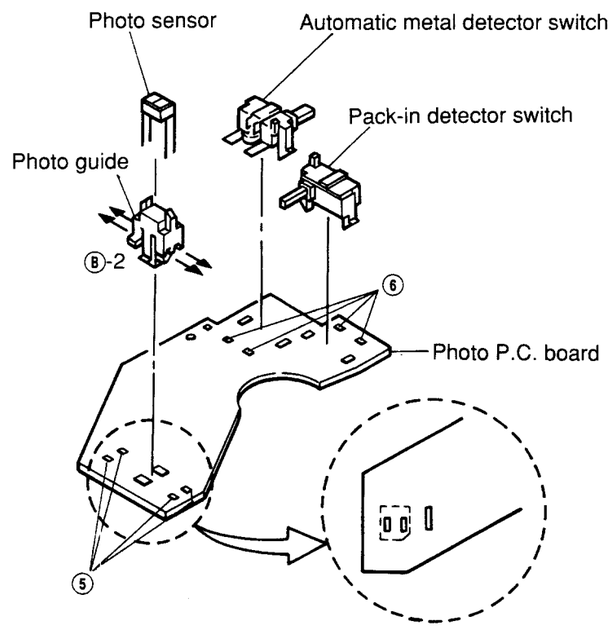

Figure 7

d. Replacement of the detector switch
(Automatic metal pack-in)
(1) Remove 4 solders ⑥ with which the switch is fixed as shown in Figure 7.
(2) Prepare the terminals of the switch of the new solder as shown in Figure 8.
(3) After that, insert the switch into the photo P.C. board, and solder the terminals.

Note: When using the soldering iron, refer to Item 2-C to make sure that the temperature of the soldering iron and the soldering time are proper. Also take care that the switch guide is properly fixed and straight.

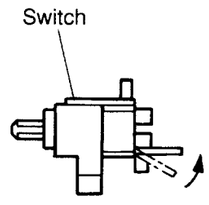

Figure 8

3. Replacement of the mounting parts on the rear of the main chassis

a. Replacement of the belt
(1) After removing the bottom cover, remove the belt.
(2) Clean the new belt with absolute alcohol, and fix it as shown in Figure 9.

Note: When fixing the belt, make sure that it is not twisted or dirty. When removing the belt, do not turn up the front of the chassis.

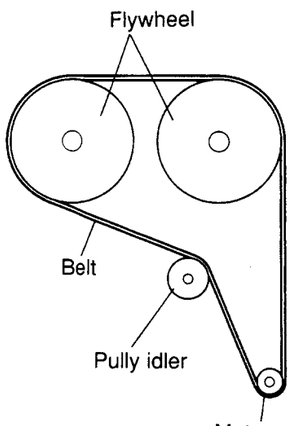

Figure 9

b. Replacement of the motor
(1) After removing the belt, remove spring ⑦ as shown in Figure 10.
(2) Remove solder ⑧-1, and remove the parallel wire (5P) from the control P.C. board as shown in Figure 11.
(3) Remove two screws ⑨ and ⑩, and remove the motor, taking care not to damage the motor idler gear. (Refer to Figure 10.)
(4) Mount the new motor following the removal steps in the reverse order.

Note: Refer to Item 2-C to make sure that the temperature of the soldering iron and the soldering time are proper. Since the parallel wire is very easily damaged, handle it with care.
Fasten the two screws with a fastening torque of 3 kg.cm.

*When inserting the clutch spring, be careful of the inserting direction as shown in the Figure.

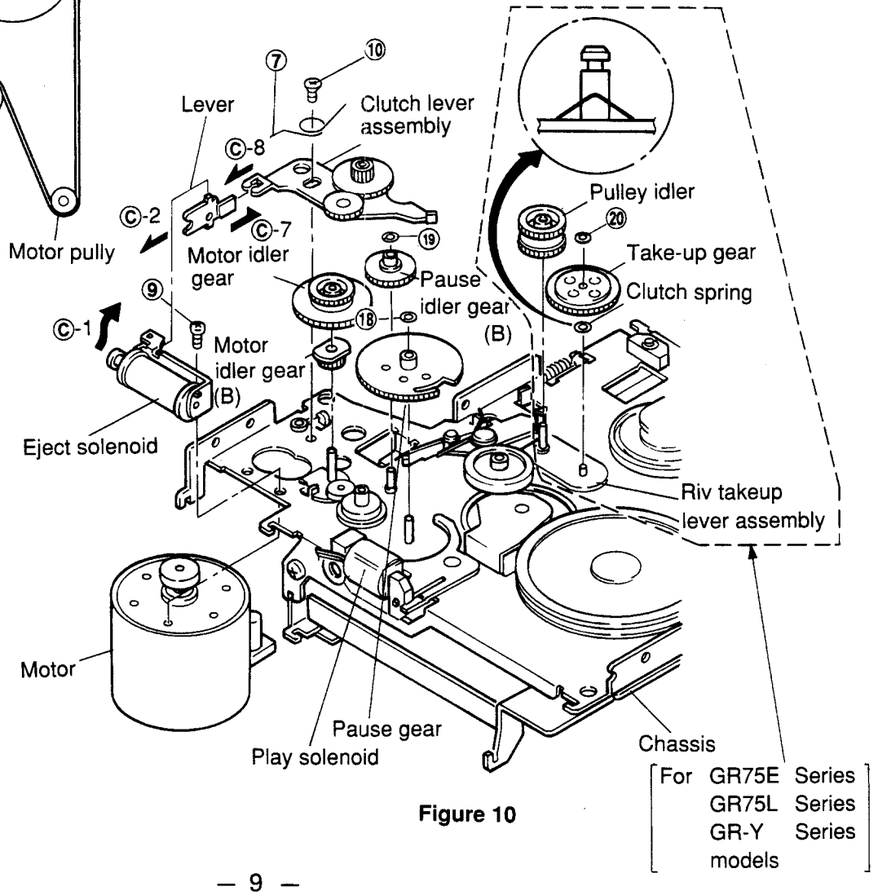

Figure 10

c. Replacement of the flywheels
(1) After removing the belt, pull out the two flywheels. Take care not to loose the polyslider washer ⑪ located between the flywheel and the chassis. (Refer to Figure 12.)
(2) Fix the polyslider washer to the new flywheel and mount the flywheel to the chassis.

d. Replacement of the play solenoid
(1) Remove the two solders ⑧-2 as shown in Figure 11.
(2) Remove one screw ⑫ and remove the solenoid as shown in Figure 11.
(3) Mount the new solenoid following the removal steps in the reverse order.

Note: Refer to Item 2-C to make sure that the temperature of the soldering iron and the soldering time are proper. Fasten the screws with a fastening torque of 2.3 kg.cm.

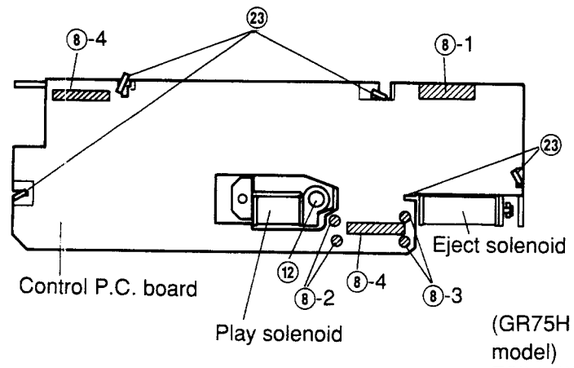

[For GR75E Series model]

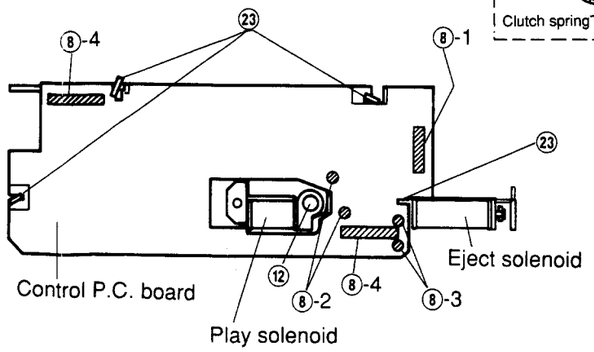

Figure 11

[For GR75L Series
GR-Y Series
GR75H Series models]

e. Replacement of the eject solenoid
(1) Remove two solders ⑧-3. Take care not to loose the tube that protects the wire. (Refer to Figure 11.)
(2) Remove screw ⑨ and remove the solenoid as shown in Figure 10.
(3) Align position Ⓒ-1 of the new solenoid with position Ⓒ-2 of the lever and fasten the screw as shown in Figure 10.
(4) Lead the wire through the tube and solder it.

Note: Refer to Item 2-C to make sure that the temperature of the soldering iron and the soldering time are proper. Fasten the screws with a fastening torque of 3 kg.cm. As the solenoid wires are not insulated, do not let them cross each other.

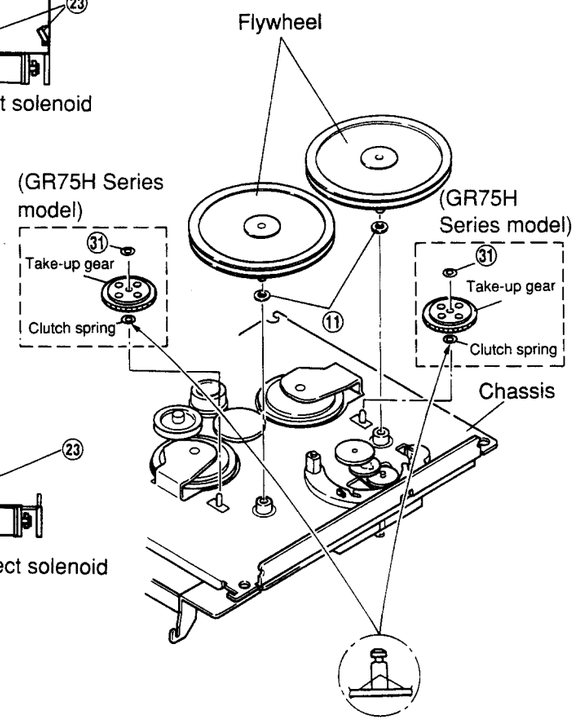

Figure 12

f. Replacement of gears

(f-1) Replacement of the reverse idler gear
(1) Remove M1.2 lock washer ⑬, pull it up from the stud of the chassis and remove the gear as shown in Figure 13.
(2) Remount following the removal steps in the reverse order.

(f-2) Replacement of the sun gear
(1) Remove M1.2 lock washer ⑭, pull it up from the stud of the chassis and remove the gear as shown in Figure 13.
(2) Mount it, following the removal steps in the reverse order.

(f-3) Replacement of the fixing gear
(1) Adjust the two mounting claws for the fix gear on the chassis ⑮ and remove the section ⓒ-3 of the gear by pulling it up in the direction of the arrow shown in Figure 13.
(2) Insert the section ⓒ-4 of the new gear into the chassis, and mount it following the removal steps in the reverse order as shown in Figure 13.

(f-4) Replacement of the reverse lever assembly and planet gear
(1) Remove both the fixing gear and the sun gear and remove the reverse lever assembly as shown in Figure 13.
(2) Remove M1.7 lock washer ⑯ and remove the planet gear as shown in Figure 14.
(3) Mount the new planet gear and reverse lever following the removal steps in the reverse order.

Notes on f-1 through f-4:
After mounting all parts, check if the reverse lever moves in the directions marked ⓒ-5 when the reverse gear is turned clockwise and counterclockwise.

* After mounting the fixing gear, bend the claws ⑮ into the form of as shown in the Figure.

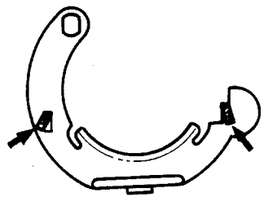

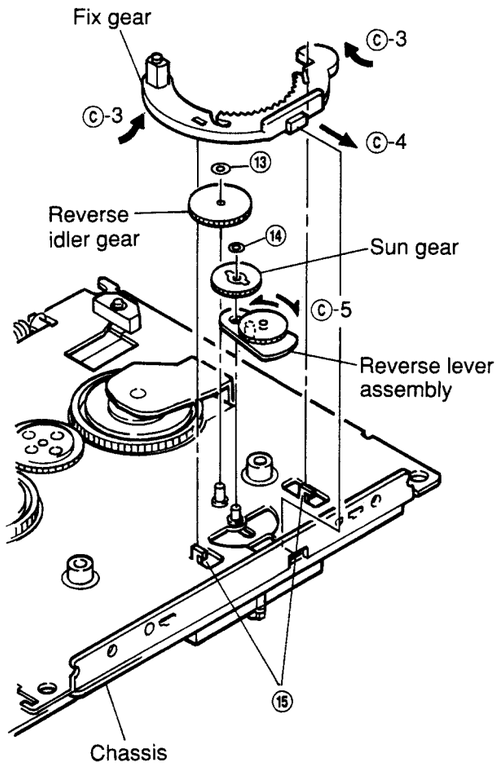

Figure 13

(f-5) Replacement of the clutch lever assembly and eject idler gear
(1) After removing the motor, remove the motor idler gear and the motor idler gear (B) and remove the clutch lever assembly as shown in Figure 10.
(2) Remove M1.2 lock washer ⑰ and remove the eject idler gear as shown in Figure 15.
(3) Mount the new gears and clutch lever following the removal steps in the reverse order.

Note: When mounting the gears to the lever, apply grease (PG-671) to the position ⓒ-6 as shown in Figure 15. Align the position ⓒ-7 with the position ⓒ-8 and mount the clutch lever as shown in Figures 10 and 15.

(f-6) Replacement of the pause gear
(1) Remove M1.2 lock washer ⑱ and remove the pause gear pulling it up from the stud of the chassis as shown in Figure 10.
(2) Mount the new gear following the removal steps in the reverse order.

(f-7) Replacement of the pause idler gear (B)
(1) After removing the motor and the motor idler gear, remove M1.2 lock washer ⑲ and remove the gear by pulling it up from the stud of the chassis as shown in Figure 10.
(2) Mount the new gear by following the removal steps in the reverse order.

(f-8) Replacement of the take-up gear
(1) After removing the belt and the pulley idler gear, remove M1.2 lock washer ⑳ by pulling it up from the stud of the riv take-up lever assembly as shown in Figure 10.
After removing the Flywheel, remove M1.2 lock washer ㉛ and remove the gear by pulling it up from the stud of the chassis as shown in figure 12. [For GR75H Series model]
(2) Remount the take-up gear following the removal steps in the reverse order.

Notes on f:
Do not reus e the used washers. Take care to avoid damage by piercing and tearing.

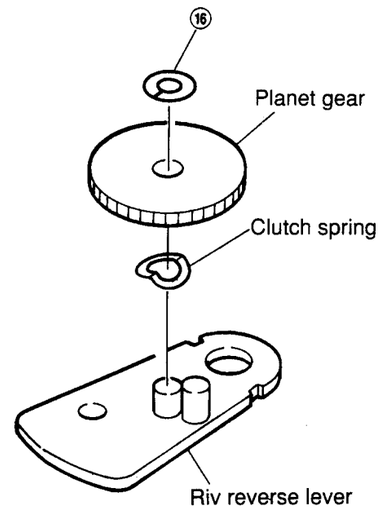

[Disassembly Reverse Lever Assembly]

Figure 14

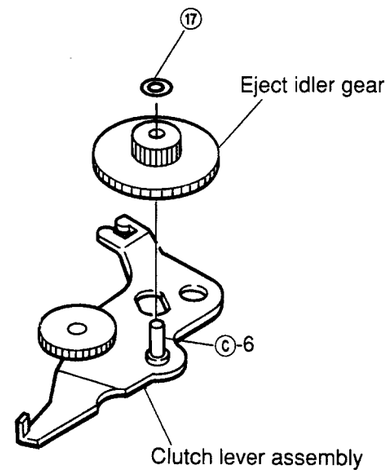

Figure 15

4. Replacement of the parts mounted on the front of the main chassis

a. Replacement of the audio P.C. board
(1) Remove two solders ㉑ and remove the parallel wire (7P) and the head P.C. board as shown in Figure 16.
(2) Adjust the two claws ㉒ to the rectangular holes on the P.C. board and remove the P.C. board as shown in Figure 16.
(3) After replacement, mount the new P.C. board following the removal steps in the reverse order.

Note: The head P.C. board and the parallel wire are easily damaged. Handle them with care. Refer to Item 2-C to make sure that the temperature of the soldering iron and the soldering time are proper. Do not bring the soldering iron near the head P.C. board.

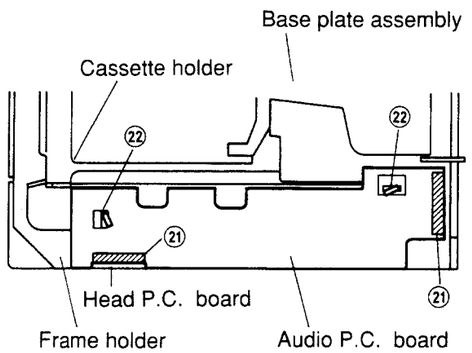

Figure 16

b. Replacement of the control P.C. board
(1) Remove seven solders ⑧ and remove the three parallel wires and the wires of the eject solenoid and of the play solenoid as shown in Figure 11.
(2) Remove five claws ㉓ and remove the P.C. board as shown in Figure 11. [For GR75E Series model] Remove four claws ㉓ and remove the P.C. board as shown in Figure 11. [For GR75L Series, GR-Y Series, GR75H Series models]
(3) After replacing the old P.C. board with a new one, mount it following the removal steps in the reverse order.

Note: As mentioned in Item 4-a, handle the parallel wires carefully, and be sure that the temperature of the soldering iron and the soldering time are proper. As the wires of the eject solenoid are not insulated, do not let them cross each other.

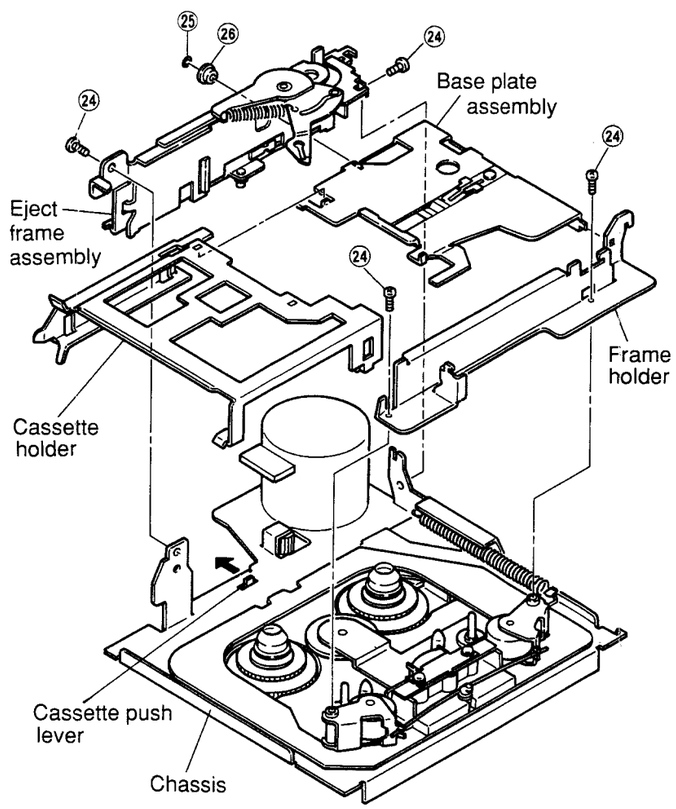

Figure 17

c. Disassembly and assembly of the cassette holder
(1) Remove four screws ㉔ and remove the eject frame assembly and the frame holder as shown in Figure 17.
(2) Remove M1.2 lock washer ㉕ and plate base roller ㉖ and remove the cassette holder and the base plate assembly as shown in Figure 17.
(3) Remount them following the removal steps in the reverse order.

Notes:
1. When mounting the cassette holder and the base plate, insert the slider shaft into the eject arm and fix them turning the slider shaft in the direction indicated by the arrow in the figure. Make sure that the cassette holder and the base plate are in the cassette-in mode during this operation. (Refer to Figure 18).
2. When mounting the eject frame assembly, push the cassette push lever in the direction indicated by the arrow in the Figure 17.
3. When mounting the base plate assembly and the eject frame assembly, or when mounting the eject frame assembly to the chassis, do not apply excessive force to avoid deformations of the eject arm and the frame.
4. Do not reuse the used washers. Take care to avoid damage by piercing and tearing.

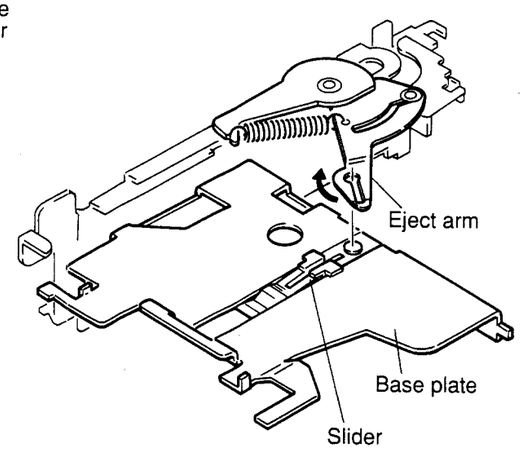

Figure 18

d. Replacement of the reels
(1) Remove M1.7 two lock washers ㉖ (Refer to figure 19).
(2) Move the select lever in the direction marked Ⓓ-1 in the Figure and remove the reel by gripping the reel gear as shown in Figure 19.
(3) After replacement, mount the new reels following the removal steps in the reverse order.
(4) After mounting, check the tape speed and the wow and flutter with test tape MTT-111.

Note: Since the reel is easily loosened if the cap is gripped, always handle it gripping the gear. Do not reuse the used washers. Take care to avoid damage by piercing and tearing.

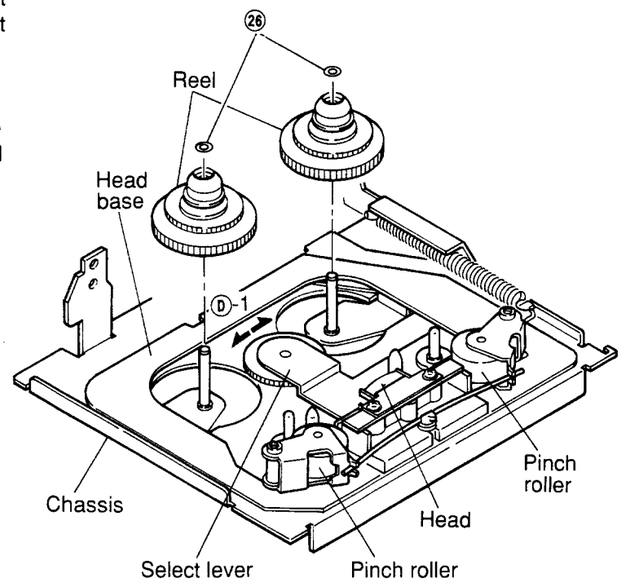

Figure 19

e. Replacement of the pinch rollers
(1) Remove pinch roller spring ㉗ as shown in Figure 20.
(2) Remove M3.1 two lock washers ㉘ and remove the pinch roller as shown in Figure 20.
(3) Mount the pinch rollers following the removal steps in the reverse order.
Apply insulation coating to the position Ⓓ-2 of the pinch roller as shown in Figure 20.

Note: Make sure that the pinch rollers are thoroughly fixed and that they are not deformed. Do not reuse used lock washers. Take care to avoid damage by piercing and tearing.

f. Replacement of the head
(1) After removing the pinch roller spring, remove two screws ㉙ as shown in Figure 21.
(2) Remove solder ㉚ and remove the head from the head P.C. board as shown in Figure 22.
(3) After replacement, mount the new head following the removal steps in the reverse order.

Notes: 1. Refer to Item 2-C to make sure that the temperature of the soldering iron and the soldering time are proper. Do not bring the soldering iron near the head P.C. board. Make sure that the head P.C. board is not lifted.
2. Fasten the two screws with a fastening torque of 2.3 kg.cm. Note that the tension of the head spring can be decreased if the screws are fastened too strongly.

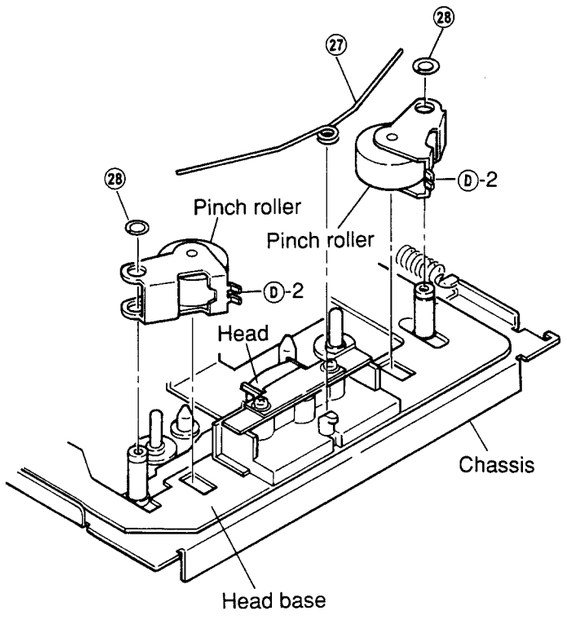

Figure 20

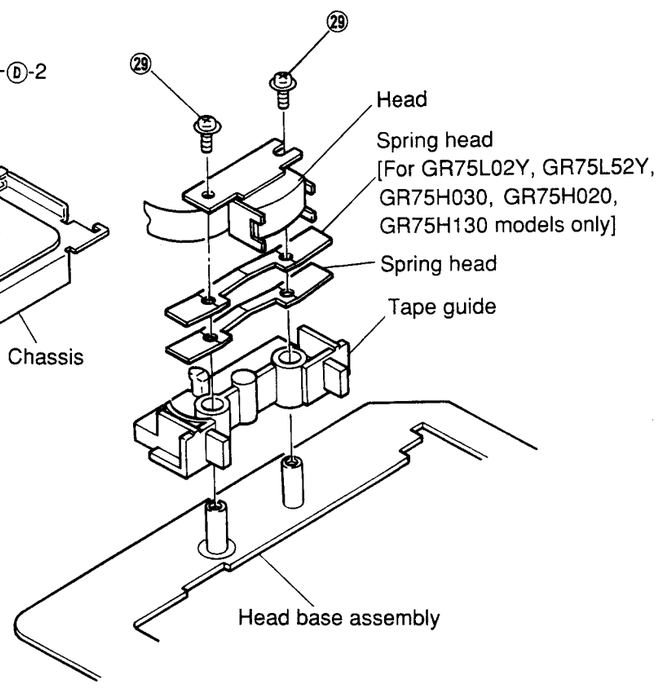

Figure 21

(4) Adjust the height of the head as shown in Figures 23, 24 and 25.
① Place the height adjustment gauge (AI-500) on the head base, and adjust the height so that the check bar fits in the tape head guide smoothly.
② When the check bar touches the top (or bottom) of the tape guide, insert a spacer (t 0.1 mm or polislider washer t 0.13 mm).
If necessary, remove the spacer.

Note: If you do not have a height gauge like described in (4)-①, run the tape at normal speed and adjust the height of the head and the tape head guide so that the tape does not curl.

(5) After having assembled the complete mechanism, adjust the angle of the head with test tape MTT-113C. (Refer to chapter "Adjustment of the head angle".) After the adjustment, apply the screw lock and fix the screws.

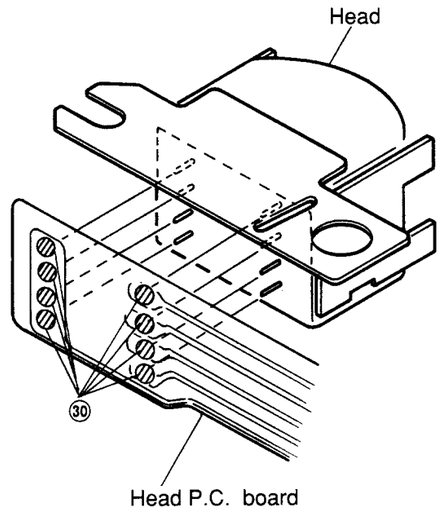

Figure 22

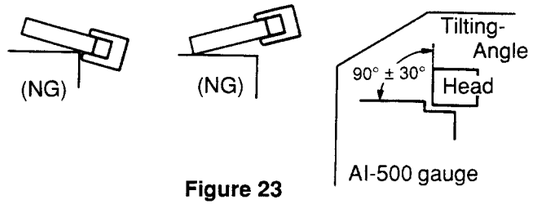

Figure 23

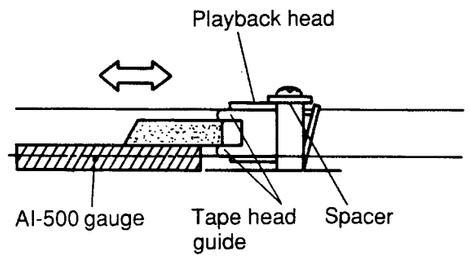

Figure 24

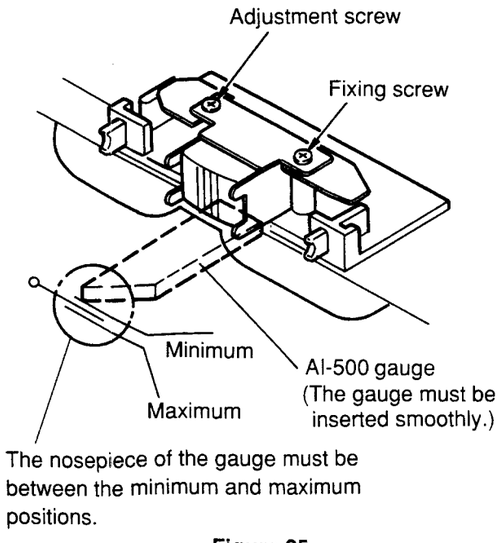

Figure 25

Exploded View (GR75E Series) (1/4)

● For GR75E010/01A/020 Models

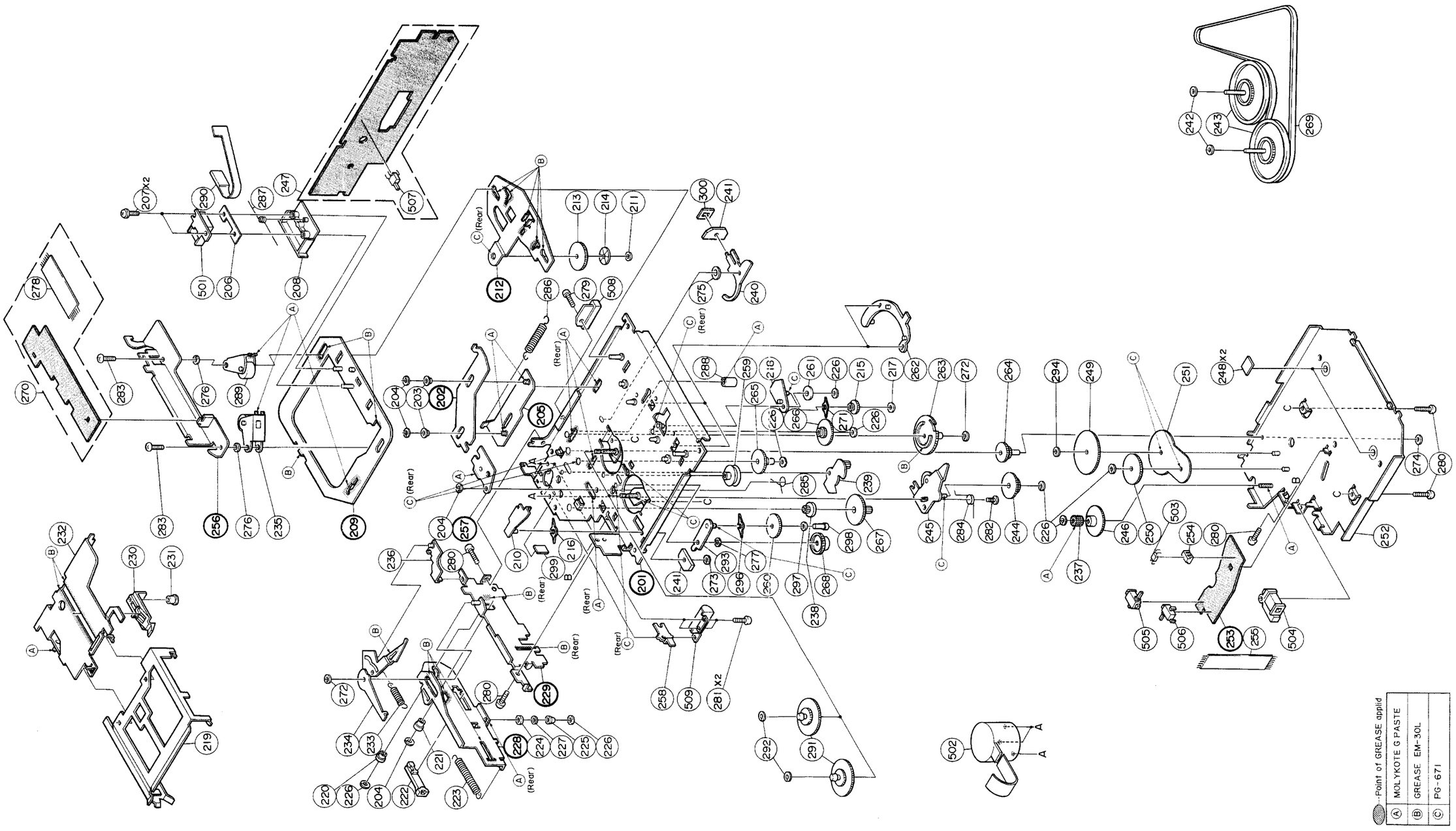

Cassette Deck Assembly Parts List (GR75E Series) (1/4)

Note : The parts without parts list are not supplied.

	Symbol No.	IN-dex	Part No.	Description
	203	3-C	43A11072W01	Roller, Sub Head
	204		04B41345P01	Washer, Lock(M1.2)
	206	2-B	41A31756W01	Spring, Head
	207	2-B	03S40019G03	Screw, F-Locks(M2x4)
	208	2-B	43B12545W01	Tape, Guide
	210	4-C	01A10206W01	Assy., Riv Lever R/F Sol
	211	2-D	04B41345P29	Washer, Lock(M2.6)
	213	2-D	44A10295W01	Gear, Sensor
	214	2-D	14A10681W01	Reflector
	215	3-E	44A30480W01	Gear, Planet
	216	3-E	41A10097W02	Spring, Clutch
	217	3-E	04B41345P35	Washer, Lock(M1.7)
	218	3-E	01A30824W01	Assy., Riv Lever Reverse
●	219	4-B	07B40283W01	Holder, Cassette
■	219	4-B	07B40283W01	Holder, Cassette
▲	219	4-B	07B10074W01	Holder, Cassette
	220	5-B	43A12583W01	Roller, Eject
	221	5-C	43A63281F01	Roller, Plate Base
	222	5-C	44A82206F01	Rack
	223	5-C	41B10386W03	Spring, GR(Rack)
	224	4-C	43A10121W01	Roller, Eject A
	225	4-D	43A10360W01	Roller, Eject B
	226		04B41345P11	Washer, Lock(M1.2)
	227	4-D	43A12377W01	Roller, Eject C
	230	4-A	45B10376W01	Slider
	231	4-B	47A63278F01	Shaft, Slider
	232	4-A	01A10212W01	Assy.,Riv Plate Base
	233	4-C	41B10386W01	Spring, Eject Arm
	234	4-B	01A10148W01	Assy., Riv Eject Arm A
	235	3-B	01B30863W02	Assy., Pinch Roller
	236	4-C	45A10087W01	Lever Pack In SW
	237	4-F	44A12975W01	Pinion, Eject
	238	4-E	44A13617W01	Gear, Motor Idler(B)
	239	3-E	01A10201W02	Assy., Riv Lever Pause
	240	2-D	45A40725W01	Lever, Play Sol
	241		76T10374W01	Chip
	242	1-G	04S40075G05	Washer Polyslider (M2.1)
	243	1-G	01A10368W01	Assy., Flywheel
	244	3-F	44A10141W01	Gear, Eject Idler
	245	3-E	01A10205W02	Assy., Riv Lever Clutch A
	246	3-F	44A10145W01	Gear, Eject
	247	2-B	01V11500W18	Assy., GR Control P.C. Board
	248	3-G	43A41656W01	Spacer, UHMW
	249	3-F	44A11063W01	Gear, Bottom A
	250	3-F	44A11064W01	Gear, Bottom B
	251	3-G	34A11122W02	Washer, GR
	252	3-H	01A10210W02	Assy., Riv. Cover Bottom
	254	3-G	15B11065W01	Guide, Photo
	255	4-G	30T15126W01	Wire, PC Sensor(7P)
	258	4-D	45A10101W01	Lever, Eject Sol
	259	3-D	49A10131W01	Pulley, Idler
	260	4-E	44A10133W01	Gear, Take Up
	261	3-E	44A10134W01	Gear, Sun
	262	3-E	44B10135W01	Gear, Fix
	263	3-E	44B30484W01	Gear, Pause
	264	3-F	44A10137W01	Gear, Pause Idler A
	265	3-D	44A10379W01	Gear, Pause Idler B
	266	3-E	44A10138W01	Gear, Reverse Idler
	267	3-E	44A10139W01	Gear, Motor Idler
	268	4-E	44A11062W01	Gear, Reel Idler
	269	1-G	42A10380W01	Belt, GR
●	270	3-A	01V14700W68	Assy., GR Audio P.C. Board
■	270	3-A	01V11500W19	Assy., GR Audio P.C. Board
▲	270	3-A	01V11500W19	Assy., GR Audio P.C. Board
	271	3-E	41A30475W01	Spring, Clutch
	272		04B41345P15	Washer, Lock(M1.2)
	273	4-D	04B41345P02	Washer, Lock(M1.7)
	274	3-H	04B41345P17	Washer, Lock(M1)
	275	2-D	04B41345P30	Washer, Lock(M3.1)
	276		04B41345P32	Washer, Lock(M3.1)
	277	4-E	04B41345P37	Washer, Lock(M2.1)
	278	2-A	30T15126W02	Wire, PC Joint 7P
	279	2-D	03S44205G78	Screw, Pan(M2x6)
	280		03S44205G30	Screw, Pan(M2.6x4)
	281	4-D	03S72235F53	Screw, Pan(M2x3.3)
	282	3-F	03A12132W02	Screw, Eject Clutch (M2x2.3)
	283		03S43997P64	Screw, Pan(M1.7x3)
	284	3-F	41A10384W01	Spring, Eject Clutch
	285	3-E	41A10385W01	Spring, Cas Push
	286	2-C	41B10386W02	Spring, Sub Head

Notes: ● ; For GR75E020 model only ■ ; For GR75E010 model only
▲ ; For GR75E01A model only Others ; Common

	Symbol No.	IN-dex	Part No.	Description
	287	2-B	41A10387W01	Spring, Pinch Roller
	288	3-D	43A12719W01	Roller, Pause
	289	3-B	01B30863W01	Assy., Pinch Roller
	290	2-B	84T25151W01	Head P.C. Board
	291	4-E	01T35403W01	Assy., Reel
	292	4-E	04B41345P12	Washer, Lock(M1.7)
	293	4-D	01A30161W01	Assy., Riv Lever Take Up
	294	3-F	04B41345P34	Washer Lock(M1.2)
	296	4-D	41A40910W01	Spring, Clutch
	297	4-E	43A41543W01	Washer, Som(M1.2)
	298	3-E	47A41458W01	Pin, Take Up
	299	4-C	43A40388W01	Spacer, Polyslider
	300	2-D	43A41744W01	Lock, Solenoid
	Miscellaneous			
●	501	2-B	88T15971W01	Head
■	501	2-B	88T10373W01	Head
▲	501	2-B	88T10373W01	Head
	502	4-E	01V11500W64	Assy., Motor(Main, 13.2V-80mA)
	503	3-G	51T15144W01	Sensor, Photo
	504	4-G	01T10371W01	R/F Sol. Assy.
	505	4-F	40T15382W01	SW., Detector (Pack Down)
	506	4-G	40T15382W01	SW., Detector(Metal)
	507	2-C	40T15222W01	SW., Detector (Pack In)
	508	2-D	01T15249W01	Assy., Play Solenoid
	509	4-D	01T10369W02	Assy., Eject Solenoid

Notes: ● ; For GR75E020 model only ■ ; For GR75E010 model only
▲ ; For GR75E01A model only Others ; Common

Exploded View (GR75L Series) (2/4)

● For GR75L020/02A Models

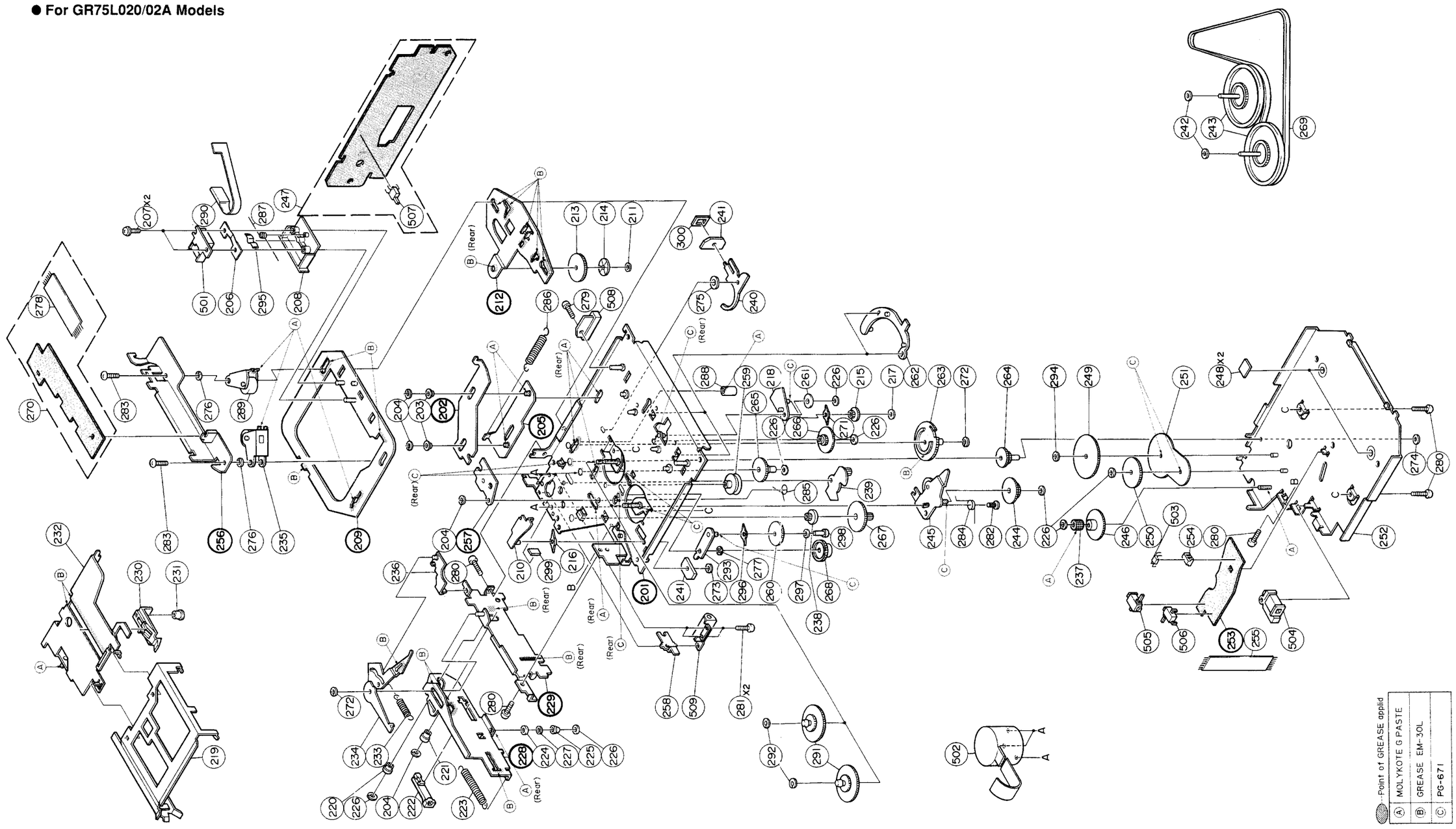

Cassette Deck Assembly Parts List (GR75E Series) (2/4)

Note : The parts without parts list are not supplied.

Symbol No.	IN-dex	Part No.	Description
203	3-C	43A11072W01	Roll, Sub Head
204		04B41345P01	Washer, Lock(M1.2)
206	2-B	41A31756W01	Spring, Head
207	2-B	03S40019G03	Screw, F-Locks(M2x4)
208	2-B	43B12545W01	Tape, Guide
210	4-C	01A10206W01	Assy., Riv Lever R/F Sol.
211	2-D	04B41345P29	Washer, Lock(M2.6)
213	2-D	44A10295W01	Gear, Sensor
214	2-D	14A10681W01	Reflector
215	3-E	44A30480W01	Gear, Planet
216	3-E	41A10097W02	Spring, Clutch
217	3-E	04B41345P35	Washer, Lock(M1.7)
218	3-E	01A30824W01	Assy., Riv Lever Reverse
219	4-B	07B40283W01	Holder, Cassette
220	5-B	43A12583W01	Roller, Eject
221	5-C	43A63281F01	Roller, Plate Base
222	5-C	44A82206F01	Rack
223	5-C	41B10386W03	Spring, GR(Rack)
224	4-C	43A10121W01	Roller, Eject(A)
225	4-D	43A10360W01	Roller, Eject(B)
226		04B41345P11	Washer, Lock(M1.2)
227	4-D	43A12377W01	Roller, Eject(C)
230	4-A	45B10376W01	Slider
231	4-B	47A63278F01	Shaft, Slider
232	4-A	01A10212W01	Assy., Riv Plate Base
233	4-C	41B10386W01	Spring, Eject Arm
234	4-B	01A21754W01	Assy., Riv Eject Arm(A)
235	3-B	01B30863W02	Assy., Pinch Roller
236	4-C	45A10087W01	Lever, Pack In SW.
237	4-F	44A20314W01	Pinion, Eject
238	4-E	44A13617W01	Gear, Motor Idler(B)
239	3-E	01A10201W02	Assy., Riv Lever Pause
240	2-E	45A40725W01	Lever, Play Sol
241		76T10374W01	Chip
242	1-G	04S40075G05	Washer, Polyslider (M2.1)
243	1-G	01A10368W01	Assy., Flywheel
244	3-F	44A10141W01	Gear, Eject Idler
245	3-E	01A10205W02	Assy., Riv Lever Clutch(A)
246	3-F	44A10145W01	Gear, Eject
247	2-B	01V23700W03	Assy., GR Control P.C. Board

Notes : ◆ ; For GR75L020 model only ○ ; For GR75L02A model only
Others ; Common

Symbol No.	IN-dex	Part No.	Description
248	3-G	43A41656W01	Spacer, UHMW
249	3-F	44A11063W01	Gear, Bottom(A)
250	3-F	44A11064W01	Gear, Bottom(B)
251	3-G	34A11122W02	Washer, GR
252	3-H	01A10210W02	Assy., Riv. Cover Bottom
254	3-G	15B11065W01	Guide, Photo
255	4-G	30T15126W01	Wire, PC Sensor(7P)
258	4-D	45A10101W01	Lever, Eject Sol.
259	3-D	49A10131W01	Pulley, Idler
260	4-E	44A10133W01	Gear, Take Up
261	3-E	44A10134W01	Gear, Sun
262	3-E	44B10135W01	Gear, Fix
263	3-E	44B21670W01	Gear, Pause
264	3-F	44A10137W01	Gear, Pause Idler(A)
265	3-D	44A10379W01	Gear, Pause Idler(B)
266	3-E	44A10138W01	Gear, Reverse Idler
267	3-E	44A10139W01	Gear, Motor Idler
268	4-E	44A11062W01	Gear, Reel Idler
269	1-G	42A10380W01	Belt, GR
270	3-A	01V14700W68	Assy., GR Audio P.C. Board
271	3-E	41A30475W01	Spring, Clutch
272	3-F	04B41345P15	Washer, Lock(M1.2)
273	4-D	04B41345P02	Washer, Lock(M1.7)
274	3-H	04B41345P17	Washer, Lock(M1)
275	2-D	04B41345P30	Washer, Lock(M3.1)
276		04B41345P32	Washer, Lock(M3.1)
277	4-E	04B41345P37	Washer, Lock(M2.1)
278	2-A	30T15126W02	Wire, PC Joint 7P
279	2-D	03S44205G78	Screw, Pan(M2x6)
280		03S44205G30	Screw, Pan(M2.6x4)
281	4-D	03S72235F53	Screw, Pan(M2x3.3)
282	3-F	03A12132W02	Screw, Eject Clutch (M2x2.3)
283		03S43997P64	Screw, Pan(M1.7x3)
284	3-F	41A10384W01	Spring, Eject Clutch
285	3-E	41A10385W01	Spring, Cas. Push
286	2-C	41B10386W02	Spring, Sub Head
287	2-B	41A10387W01	Spring, Pinch Roller
288	3-D	43A12719W01	Roller, Pause
289	3-B	01B30863W01	Assy., Pinch Roller
290	2-B	84T25151W01	Head P.C. Board

Symbol No.	IN-dex	Part No.	Description
291	4-E	01T35403W02	Assy., Reel
292	4-E	04B41345P12	Washer, Lock(M1.7)
293	4-D	01A30161W01	Assy., Riv Lever Take Up
294	3-F	04B41345P34	Washer, Lock(M1.2)
295	2-B	26A20537W01	Shield, Plate
296	4-D	41A40910W01	Spring, Clutch
297	4-E	43A41543W01	Washer, Som(M1.2)
298	3-E	47A41458W01	Pin, Take Up
299	3-D	43A40388W01	Spacer, Polyslider
300	2-D	43A41744W01	Lock, Solenoid

Miscellaneous

	Symbol No.	IN-dex	Part No.	Description
	501	2-B	88T15971W01	Head
◆	502	4-E	01V23900W60	Assy., Motor(13.2V-105mA)
○	502	4-E	01V43400W37	Assy., Motor(13.2V-88mA)
	503	3-G	51T15144W01	Sensor, Photo
	504	4-G	01T10371W01	R/F Sol. Assy
	505	4-F	40T15382W01	SW., Detector (Pack Down)
	506	4-G	40T15382W01	SW., Detector (Metal)
	507	2-C	40T15222W01	SW., Detector (Pack In)
	508	2-D	01T15249W01	Assy., Play Solenoid
	509	4-D	01T10369W02	Assy., Eject Solenoid

Notes : ◆ ; For GR75L020 model only ○ ; For GR75L02A model only
Others ; Common

Exploded View (GR-Y Series) (3/4)

● For GR75L02Y/52Y Model

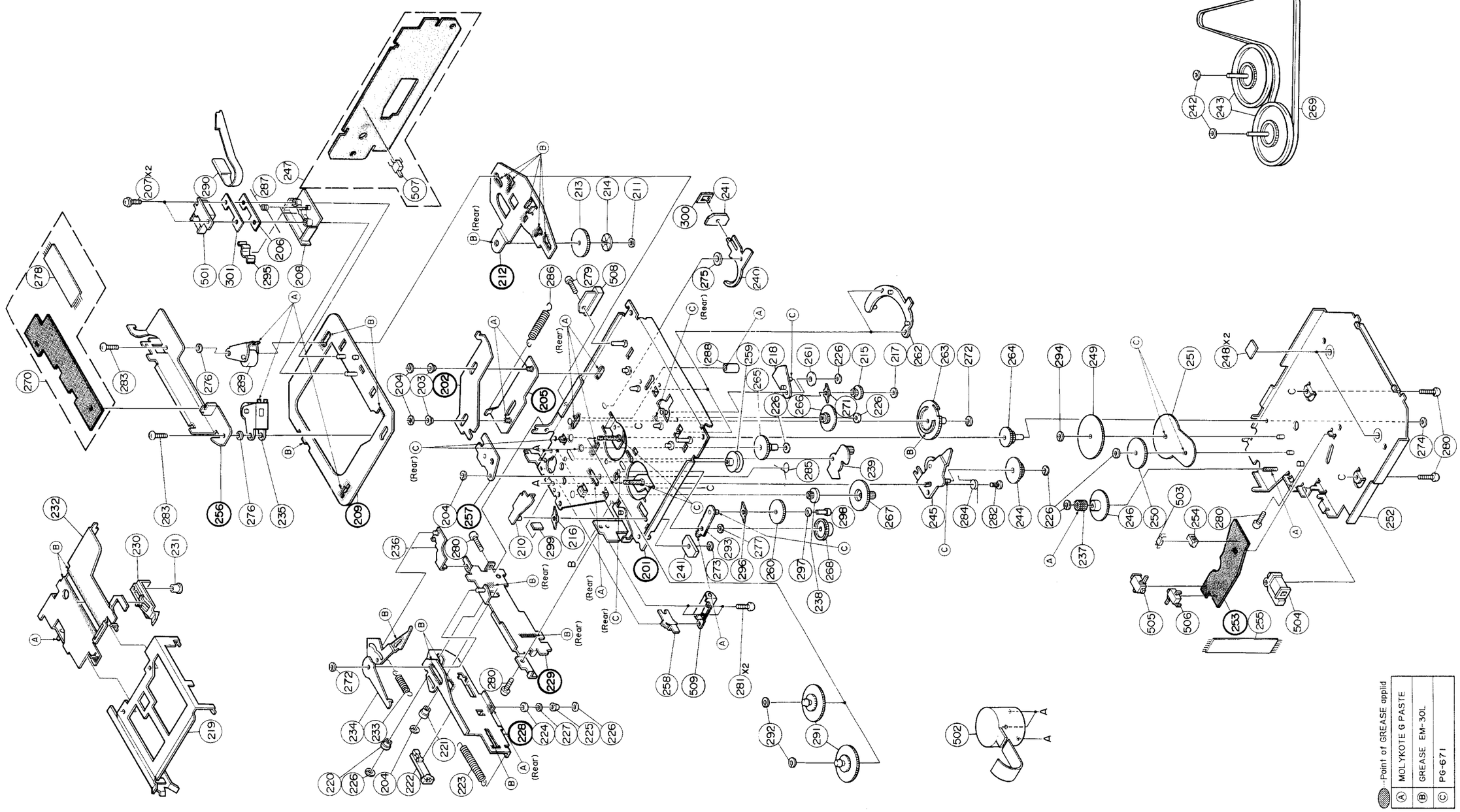

Cassette Deck Assembly Parts List (GR-Y Series) (3/4)

Note : The parts without parts list are not supplied.

Symbol No.	IN-dex	Part No.	Description
203	3-C	43A11072W01	Roll, Sub Head
204		04B41345P01	Washer, Lock(M1.2)
206	2-B	41A31756W01	Spring, Head
207	2-B	03S40019G03	Screw, F-Locks(M2x4)
208	2-B	43B12545W01	Tape, Guide
210	4-C	01A10206W01	Assy., Riv Lever R/F Sol.
211	2-D	04B41345P29	Washer, Lock(M2.6)
213	2-D	44A10295W01	Gear, Sensor
214	2-D	14A10681W01	Reflector
215	3-E	44A30480W01	Gear, Planet
216		41A10097W02	Spring, Clutch
217	3-E	04B41345P35	Washer, Lock(M1.7)
218	3-E	01A30824W01	Assy., Riv Lever Reverse
219	4-B	07B40283W01	Holder, Cassette
220	5-B	43A12583W01	Roller, Eject
221	5-C	43A63281F01	Roller, Plate Base
222	5-C	44A82206F01	Rack
223	5-C	41B10386W03	Spring, GR(Rack)
224	4-C	43A10121W01	Roller, Eject(A)
225	4-D	43A10360W01	Roller, Eject(B)
226		04B41345P11	Washer, Lock(M1.2)
227	4-D	43A12377W01	Roller, Eject(C)
230	4-A	45B10376W01	Slider
231	4-B	47A63278F01	Shaft, Slider
232	4-A	01A10212W01	Assy., Riv Plate Base
233	4-C	41B10388W01	Spring, Eject Arm
234	4-B	01A21754W01	Assy., Riv Eject Arm(A)
235	3-B	01B30863W02	Assy., Pinch Roller
236	4-C	45A10087W01	Lever, Pack In SW.
237	4-F	44A20314W01	Pinion, Eject
238	4-E	44A13617W01	Gear, Motor Idler(B)
239	3-E	01A10201W02	Assy., Riv Lever Pause
240	2-D	45A40725W01	Lever, Play Sol.
241		76T10374W01	Chip
242	1-G	04S40075G05	Washer, Polyslider (M2.1)
243	1-G	01A10368W01	Assy., Flywheel
244	3-F	44A10141W01	Gear, Eject Idler
245	3-E	01A10205W02	Assy., Riv Lever Clutch(A)
246	3-F	44A10145W01	Gear, Eject
☆ 247	2-B	01V23700W03	Assy., GR Control P.C. Board

Notes:☆ ; For GR75L02Y model only ◇ ; For GR75L52Y model only
Others ; Common

Symbol No.	IN-dex	Part No.	Description
◇ 247		01V44200W74	Assy., GR Control P.C. Board
248	3-G	43A41656W01	Spacer, UHMW
249	3-F	44A11063W01	Gear, Bottom(A)
250	3-F	44A11064W01	Gear, Bottom(B)
251	3-G	34A11122W02	Washer, GR
252	3-H	01A10210W02	Assy., Riv. Cover Bottom
254	3-G	15B11065W01	Guide, Photo
255	4-G	30T15126W01	Wire, PC Sensor(7P)
258	4-D	45A10101W01	Lever, Eject Sol.
259	3-D	49A10131W01	Pulley, Idler
260	4-E	44A10133W01	Gear, Take Up
261	3-E	44A10134W01	Gear, Sun
262	3-E	44B10135W01	Gear, Fix
263	3-E	44B21670W01	Gear, Pause
264	3-F	44A10137W01	Gear, Pause Idler(A)
265	3-D	44A10379W01	Gear, Pause Idler(B)
266	3-E	44A10138W01	Gear, Reverse Idler
267	3-E	44A10139W01	Gear, Motor Idler
268	4-E	44A11062W01	Gear, Reel Idler
269	1-G	42A10380W01	Belt, GR
270	3-A	01V33300W03	Assy., GR Audio P.C. Board
271	3-E	41A30475W01	Spring, Clutch
272	3-F	04B41345P15	Washer, Lock(M1.2)
273		04B41345P02	Washer, Lock(M1.7)
274	3-H	04B41345P17	Washer, Lock(M1)
275	2-D	04B41345P30	Washer, Lock(M3.1)
276	3-B	04B41345P32	Washer, Lock(M3.1)
277	4-E	04B41345P37	Washer, Lock(M2.1)
278	2-A	30T15126W02	Wire, PC Joint 7P
279	2-D	03S44205G78	Screw, Pan(M2x6)
280		03S44205G30	Screw, Pan(M2.6x4)
281	4-D	03S72235F53	Screw, Pan(M2x3.3)
282	3-F	03A12132W02	Screw, Eject Clutch (M2x2.3)
283		03S43997P64	Screw, Pan(M1.7x3)
284	3-F	41A10384W01	Spring, Eject Clutch
285	3-E	41A10385W01	Spring, Cas. Push
286	2-C	41B10386W02	Spring, Sub Head
287	2-B	41A10387W01	Spring, Pinch Roller
288	3-D	43A12719W01	Roller, Pause
289	3-B	01B30863W01	Assy., Pinch Roller
290	2-B	84T35271W01	Head P.C. Board

Symbol No.	IN-dex	Part No.	Description
291	4-E	01T35403W02	Assy., Reel
292	4-E	04B41345P12	Washer, Lock(M1.7)
293	4-D	01A30161W01	Assy., Riv Lever Take Up
294	3-F	04B41345P34	Washer, Lock(M1.2)
295	2-B	26A20537W01	Shield, Plate
296	4-D	41A40910W01	Spring, Clutch
297	4-E	43A41543W01	Washer, Som(M1.2)
298	3-E	47A41458W01	Pin, Take Up
299	3-C	43A40388W01	Spacer, Polyslider
300	2-D	43A41744W01	Lock, Solenoid
301	2-B	41A41416W01	Spring, Head

Miscellaneous

501	2-B	88T15971W01	Head
☆ 502	4-E	01V23900W60	Assy., Motor(13.2V-105mA)
◇ 502	4-E	01V44200W73	Assy., Motor(13.2V-80mA)
503	3-G	51T15144W01	Sensor, Photo
504	4-G	01T10371W01	R/F Sol. Assy
505	4-F	40T15382W01	SW., Detector (Pack Down)
506	4-G	40T15382W01	SW., Detector (Metal)
507	2-C	40T15222W01	SW., Detector (Pack In)
508	2-D	01T15249W01	Assy., Play Solenoid
509	4-D	01T10369W02	Assy., Eject Solenoid

Notes:☆ ; For GR75L02Y model only ◇ ; For GR75L52Y model only
Others ; Common

Exploded View (GR75H Series) (4/4)

● For GR75H030/020/130 Model

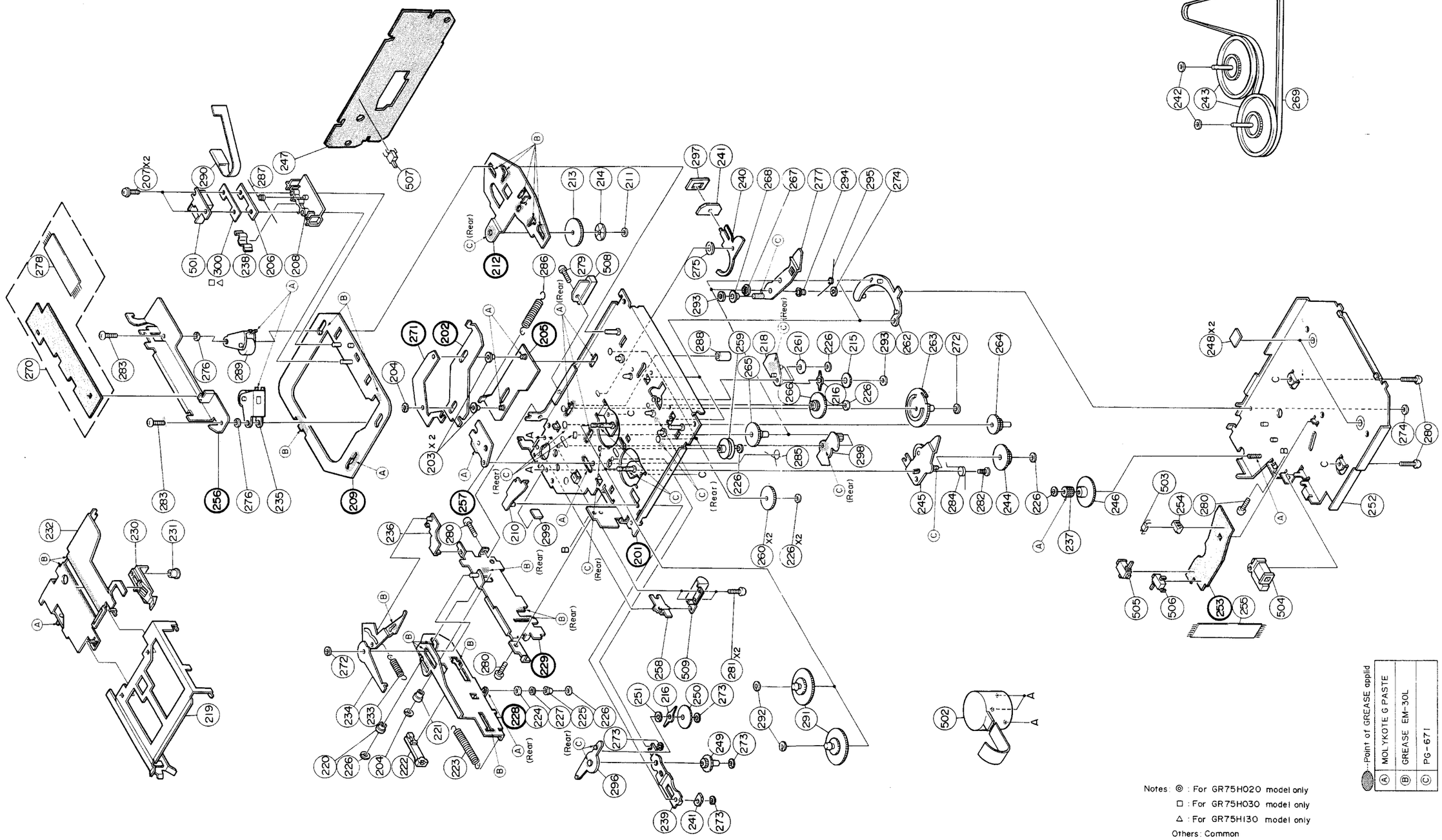

Cassette Deck Assembly Parts List (GR75H Series) (4/4)

Note : The parts without parts list are not supplied.

Symbol No.		IN-dex	Part No.	Description
	203	3-C	43A31453W01	Roller, Sub Head
	204		04B41345P01	Washer, Lock(M1.2)
	206	2-B	41A31756W01	Spring, Head
	207	2-A	03A38021W01	Screw, Flange(M2x4)
	208	2-B	43B12545W01	Tape, Guide
	210	4-C	01A30462W01	Assy., Riv Lever R/F Sol
	211	2-D	04B41345P29	Washer, Lock(M2.6)
	213	2-D	44A10295W01	Gear, Sensor
	214	2-D	14A10681W01	Reflector
	215	3-E	44A30480W01	Gear, Planet
	216		41A30475W01	Spring, Clutch
	218	3-E	01A30824W01	Assy., Riv Lever Reverse
◎	219	4-B	07B40283W01	Holder, Cassette
□	219	4-B	07B40283W01	Holder, Cassette
△	219	4-B	07B40012W01	Holder, Cassette
	220	5-B	43A12583W01	Roller, Eject
	221	5-C	43A63281F01	Roller, Plate Base
	222	5-C	44A82206F01	Rack
◎	223	5-C	41B10386W03	Spring, GR(Rack)
□	223	5-C	41B10386W03	Spring, GR(Rack)
△	223	5-C	41B10386W04	Spring, GR(Rack)
	224	5-C	43A10121W01	Roller, Eject A
	225	5-D	43A10360W01	Roller, Eject B
	226		04B41345P11	Washer, Lock(M1.2)
	227	5-D	43A12377W01	Roller, Eject C
	230	4-A	45B10376W01	Slider
	231	4-B	47A63278F01	Shaft, Slider
◎	232	4-A	01A10212W01	Assy., Riv Plate Base
□	232	4-A	01A10212W01	Assy., Riv Plate Base
△	232	4-A	01A40024W01	Assy., Riv Plate Base
◎	233	5-C	41B10386W01	Spring, Eject Arm
□	233	5-C	41B10386W01	Spring, Eject Arm
△	233	5-C	41B63283F11	Spring
◎	234	5-C	01A30883W01	Assy., Riv Eject Arm B
□	234	5-C	01A30883W01	Assy., Riv Eject Arm B
△	234	5-C	01A40021W01	Assy., Riv Eject Arm D
	235	3-B	01B30863W02	Assy., Pinch Roller
	236	4-C	45A10087W01	Lever Pack In SW
	237	4-F	44A20314W01	Pinion, Eject
	238	2-B	26A20537W01	Shield, plate
	239	5-D	01A40881W01	Assy., Riv RF Link
	240	2-D	45A40725W01	Lever, Play Sol.
	241		76T10374W01	Chip
	242	1-G	04S40075G05	Washer, Polyslider(M2.1)
	243	1-G	01A30488W01	Assy., Flywheel

Symbol No.		IN-dex	Part No.	Description
	244	3-F	44A10141W01	Gear, Eject Idler
	245	3-E	01A10205W02	Assy., Riv Lever Clutch A
	246	3-F	44A10145W01	Gear, Eject
	247	2-B	01V33500W45	Assy., GR Control P.C. Board
	248	3-G	43A41656W01	Spacer, UHMW
	249	5-D	44A30481W01	Gear, RF Idler
	250	4-D	44A30483W01	Gear, RF
	251	4-D	04S40075G58	Washer, Polyslider(M2.1)
	252	3-H	01A30463W01	Assy., Riv. Cover Bottom
	254	3-G	15B11065W01	Guide, Photo
	255	4-G	30T15126W01	Wire, PC Sensor(7P)
	258	4-D	45A10101W01	Lever, Eject Sol
	259	3-D	49A30476W01	Pulley, Idler
	260	4-E	44A30482W01	Gear, Take Up
	261	3-E	44A30478W01	Gear, Sun
	262	3-E	44B10135W01	Gear, Fix
	263	3-E	44B30484W01	Gear, Pause
	264	3-F	44A10137W01	Gear, Pause Idler A
	265	3-E	44A30486W01	Gear, Pause Idler B
	266	3-E	44A30479W01	Gear, Reverse Idler
	267	2-E	44A30485W01	Gear, Motor Idler
	268	2-E	44A30487W01	Gear, Motor Clutch
	269	1-G	42A31850W01	Belt, GR
◎	270	3-A	01V43400W38	Assy., GR Audio P.C. Board
□	270	3-A	01V33300W03	Assy., GR Audio P.C. Board
△	270	3-A	01V33300W03	Assy., GR Audio P.C. Board
	272	3-F	04B41345P15	Washer, Lock(M1.2)
	273		04B41345P02	Washer, Lock(M1.7)
	274	3-H	04B41345P17	Washer, Lock(M1)
	275	2-D	04B41345P30	Washer, Lock(M3.1)
	276	3-B	04B41345P32	Washer, Lock(M3.1)
	277	2-E	01A30464W01	Assy., Riv Play Clutch
	278	2-A	30T15126W02	Wire, PC Joint 7P
	279	2-D	03S44205G78	Screw, Pan(M2x6)
	280		03S44205G30	Screw, Pan(M2.6x4)
	281	4-D	03S72235F53	Screw, Pan(M2x3.3)
	282	3-F	03A12132W02	Screw, Eject Clutch(M2x2.3)
	283		03S43997P64	Screw, Pan(M1.7x3)
	284	3-F	41A10384W01	Spring, Eject Clutch
	285	3-E	41A10385W01	Spring, Cas Push
	286	2-C	41B10386W02	Spring, Sub Head
	287	2-B	41A10387W01	Spring, Pinch Roller
	288	3-D	43A12719W01	Roller, Pause
	289	3-B	01B30863W01	Assy., Pinch Roller
◎	290	2-B	84T25151W01	Head P.C. Board

Notes: ◎ ; For GR75H020 model only □ ; For GR75H030 model only
△ ; For GR75H130 model only Others ; Common

Symbol No.		IN-dex	Part No.	Description
□	290	2-B	84T35271W01	Head P.C. Board
△	290	2-B	84T35271W01	Head P.C. Board
	291	5-E	01T35403W01	Assy., Reel
	292	5-E	04B41345P12	Washer, Lock(M1.7)
	293	2-D	04B41345P35	Washer, Lock(M1.7)
	294	2-E	43A30827W01	Spacer, Motor Idler
	295	2-E	41A30490W01	Spring, Play Clutch
	296	5-D	01A40882W01	Assy., Riv Lever RF
	297	2-D	34A48030W01	Washer, Solenoid
	298	3-E	01A10201W02	Assy, Riv Lever Pause
	299	4-C	43A40388W01	Spacer, Polyslider
□	300	2-B	41A41416W01	Spring, Head
△	300	2-B	41A41416W01	Spring, Head
Miscellaneous				
◎	501	2-B	88T15971W01	Head
□	501	2-B	88T35406W01	Head
△	501	2-B	88T35406W01	Head
	502	5-F	01V41100W72	Assy., Motor(11.5v-85mA)
	503	3-C	51T15144W01	Sensor, Photo
	504	4-G	01T10371W01	R/F Sol. Assy.
	505	4-F	40T15382W01	SW., Detector (Pack Down)
	506	4-G	40T15382W01	SW., Detector(Metal)
	507	2-C	40T15222W01	SW., Detector (Pack In)
	508	2-D	01T15249W01	Assy., Play Solenoid
	509	4-D	01T10369W02	Assy., Eject Solenoid

Notes: ◎ ; For GR75H020 model only □ ; For GR75H030 model only
△ ; For GR75H130 model only Others ; Common

YM 206

ALPINE SERVICE MANUAL

Cassette Deck Mechanism

ADDENDUM & REVISED (III)

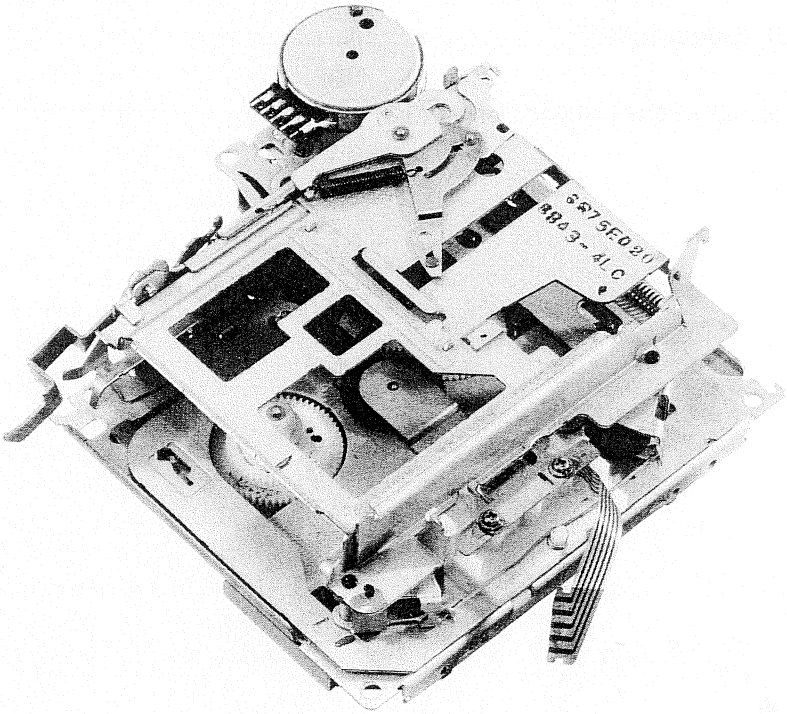

GR/GR-Y SERIES

Contents

List of Usable Lock Washers 3

List of Usable Oil 3

List of Usable Jigs 3

Disassembly, Assembly and Replacement of Functional Parts ..... 5 to 16

Exploded View (1/3) ..... 17 to 18

Cassette Deck Assembly Parts List (1/3) ..... 19 to 20

Exploded View (2/3) ..... 21 to 22

Cassette Deck Assembly Parts List (2/3) ..... 23 to 24

Exploded View (GR-Y Series) (3/3) ..... 25 to 26

Cassette Deck Assembly Parts List (GR-Y Series) (3/3) ..... 27 t o 28

List of Usable Lock Washers

	SIZE	PARTS NO.	QUANTITY		
			GR75E Series	GR75L Series	GR-Y Series
1	(M1.2 × 3.5 × 0.25)	04B41345P01	8	7	6
2	(M1.7 × 3.5 × 0.25)	04B41345P02	1	1	2
3	(M2.1 × 5 × 0.25)	04B41345P06	1	1	0
4	(M1.2 × 2.5 × 0.25)	04B41345P11	7	7	8
5	(M1.7 × 3.5 × 0.35)	04B41345P12	2	2	2
6	(M1.2 × 3.5 × 0.35)	04B41345P15	1	1	1
7	(M1 × 2.5 × 0.25)	04B41345P17	1	1	1
8	(M2.6 × 5 × 0.25)	04B41345P29	1	1	0
9	(M3.1 × 8 × 0.05)	04B41345P30	1	1	1
10	(M1.7 × 3 × 0.25)	04B41345P31	1	1	1
11	(M3.1 × 5 × 0.35)	04B41345P32	2	2	2
12	(M1.2 × 2.5 × 0.3)	04B41345P34	1	1	0
13	(M2.1 × 4 × 0.25)	04B41345P37	0	0	1
14	(M2.6 × 4.7 × 0.25)	04B41345P38	0	0	1

List of Usable Oil

1) Molykote E paste
2) Grease EM-30L
3) Grease FLOIL 425A

List of Usable Jigs

1) GR bottom gear jig (Part No. 44A20788W01)
2) Head height adjustment gauge
   AI-500 (Part No. AI-500)

Memo

Disassembly, Assembly and Replacement of Functional Parts

1. Disassembly and Assembly of Bottom Cover

(1) Turn the mechanism around as shown in Figure 1.
(2) Remove M1 lock washer ① as shown in Figure 1.
(3) Remove three screws ② as shown in Figure 1.
(4) Lift the bottom cover slowly from the position Ⓐ-1, pull the hooks out of the holes in the chassis, and remove the bottom cover as shown in Figure 1.
(5) When remounting the bottom cover, first turn the front of the mechanism up as shown in Figure 2.
(6) Slide the slider in the direction Ⓐ-2 as shown in Figure 2.
(7) Push down the cassette holder in the direction Ⓐ-3 as shown in Figure 2.
(8) Pull the door pin in the direction Ⓐ-4 so that the mechanism is locked in as shown in Figure 2.
(9) Turn the mechanism around as shown in Figure 3.
(10) Pull the automatic metal lever in the direction Ⓐ-5 and the RF solenoid chip in the direction Ⓐ-6 as shown in Figure 3.
(11) Insert the hooks of the bottom cover into the chassis in the direction Ⓐ-7, and then join the part Ⓐ-8 of the bottom cover to the chassis slowly, making sure that the 3 points indicated with the straight lines in the Figure 3 are fitted properly.
If there are troubles in mounting the bottom cover, do not apply force but remove the bottom cover once again and check the positions of the individual parts. (Refer to Figure 3.)
(12) Since the hooks marked Ⓐ-8 will be lifted slightly as shown in Figure 4, insert the jig through the hole Ⓐ-9, and fix it turning the jig slightly in the direction Ⓐ-11.
Instead of operation (12), turn the gear nose slowly with a precision screwdriver etc., taking care not to damage it.
After 2 to 3 turns, it will click into place.
(Refer to Figures 4 and 5.)
(13) Fix the screws and the lock washer that have been removed.

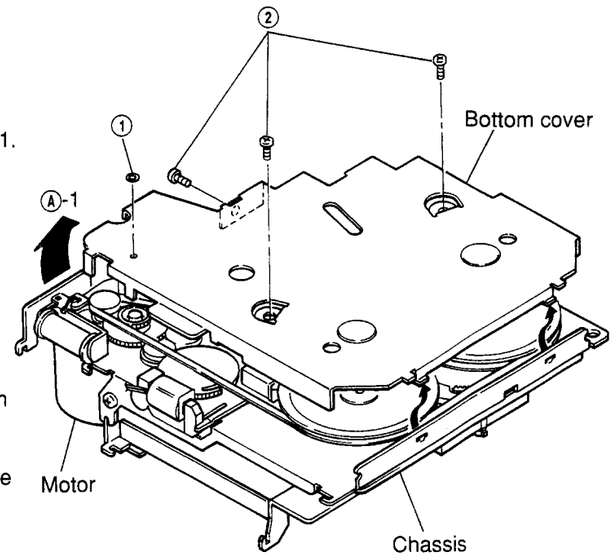

Figure 1

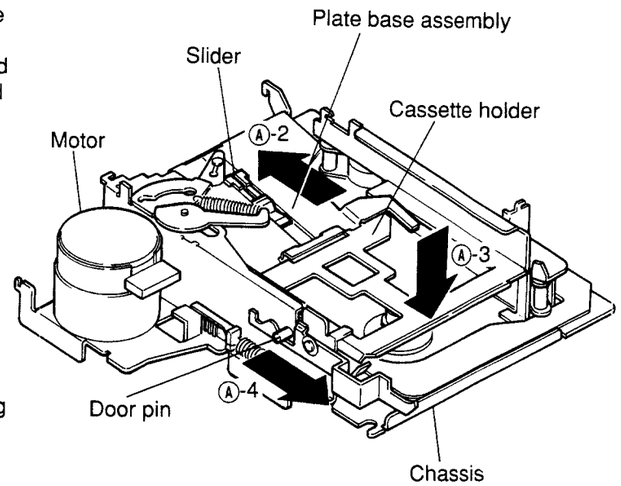

Figure 2

(14) Insert the jig into the hole Ⓐ-9 as shown in Figure and rotate the eject solenoid counterclockwise about 20 times, pulling it in the direction Ⓐ-10 with the finger.
Then the eject operation is completed.
Instead of operation (14), the eject operation can be performed by mounting the mechanism to the product. (Refer to Figures 4 and 5.)

Note: Do not reuse the used lock washers for mounting.
When turning the mechanism, be careful not to drop the gear and the flywheel.
Fasten the three screws with a fastening torque of 6 kg.cm.

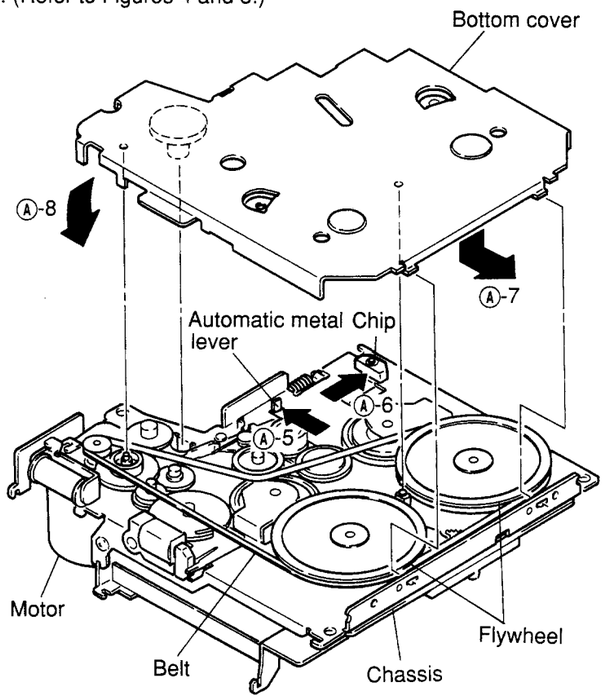

Figure 3

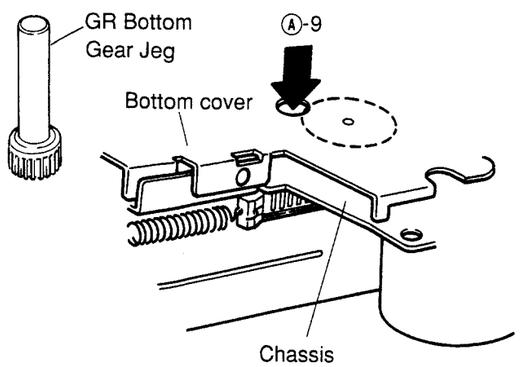

Figure 4

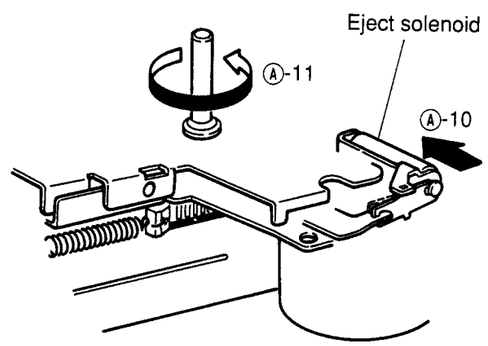

Figure 5

2. Replacement of the bottom cover mounting parts

a. Replacement of the eject gear
(1) Remove M1.2 lock washer ③ as shown in Figure 6.
(2) Pull the eject pinion out of the eject gear and remove the eject gear as shown in Figure 6.
(3) Apply the molykote E paste to the section Ⓑ-1, and mount the eject gear following the removal steps in the reverse order. After replacement is finished, make sure that the gear rotates smoothly. (Refer to Figure 6.)

Note: Do not reuse the used lock washers for remounting.
Take care to avoid damage by piercing and tearing.

b. Replacement of the RF solenoid
(1) Remove two solders ④ and remove the RF solenoid from the bottom cover by pulling it up as shown in Figure 6.
(2) Replace the solenoid with a new one, and remount it following the removal steps in the reverse order as shown in Figure 6.

Note: When removing solder ④, set the temperature of the soldering iron to 350° ± 10° and the soldering time to 1 – 3 seconds. Take care that the solder is not loose, that there is no shortcircuit and that the coating is not damaged.

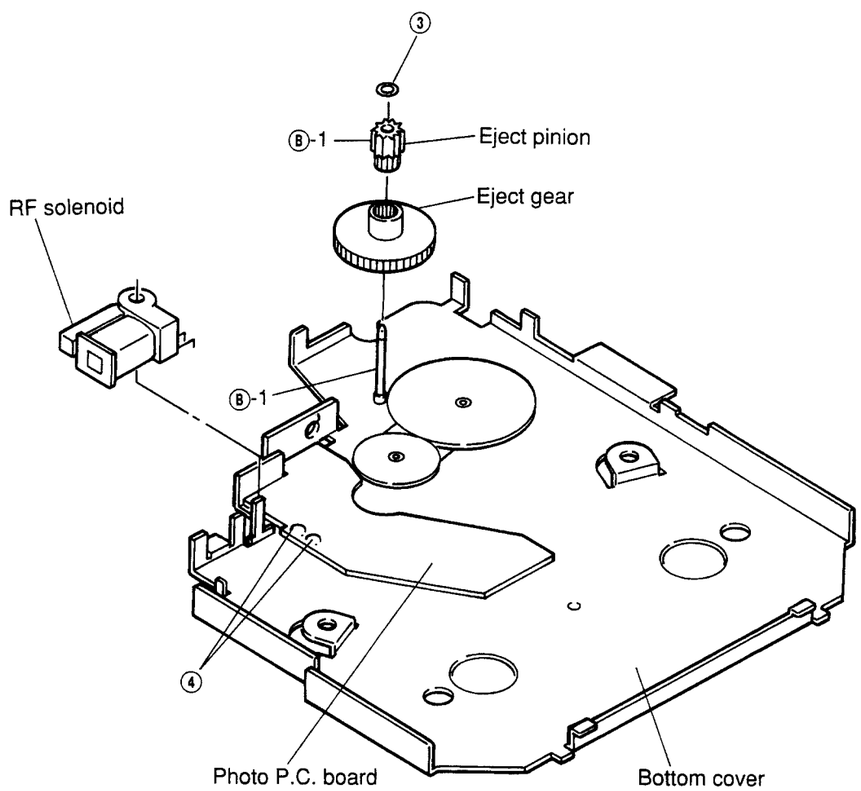

Figure 6

c. Replacement of the photo sensor
(1) Remove four solders ⑤ as shown in Figure 7.
(2) Remove the photo guide together with the photo sensor from the photo P.C. board as shown in Figure 7.
(3) Insert the new photo sensor into the photo guide, and bend the legs of the photo sensor in the direction marked Ⓑ-2 as shown in Figure 7.
(4) Insert the photo guide into the P.C. board and solder the legs so that the photo sensor is set as indicated by ⬚ in Figure 7.

Note: When using the soldering iron, set the temperature of the soldering iron to 350° ± 10° and the soldering time to 1 – 3 seconds. Take care that the solder is not loose, that there is no shortcircuit and that the coating is not damaged. Also take care that the photo guide is properly fixed and straight.

d. Replacement of the detector switch (Automatic metal pack-in)
(1) Remove 4 solders ⑥ with which the switch is fixed as shown in Figure 7.
(2) Prepare the terminals of the switch of the new solder as shown in Figure 8.
(3) After that, insert the switch into the photo P.C. board, and solder the terminals.

Note: When using the soldering iron, refer to Item 2-C to make sure that the temperature of the soldering iron and the soldering time are proper. Also take care that the switch guide is properly fixed and straight.

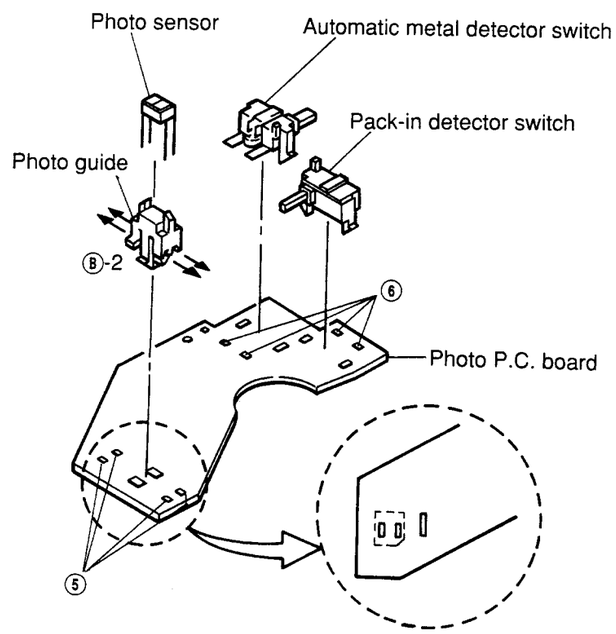

Figure 7

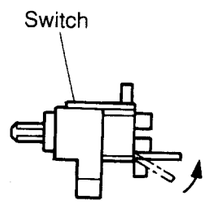

Figure 8

3. Replacement of the mounting parts on the rear of the main chassis

a. Replacement of the belt
(1) After removing the bottom cover, remove the belt.
(2) Clean the new belt with absolute alcohol, and fix it as shown in Figure 9.

Note: When fixing the belt, make sure that it is not twisted or dirty. When removing the belt, do not turn up the front of the chassis.

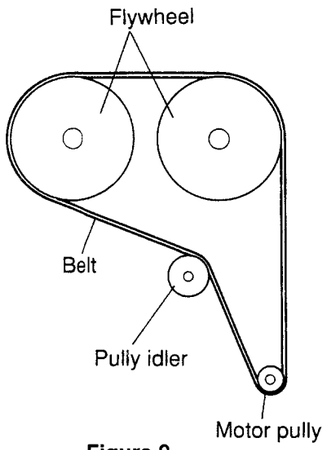

Figure 9

b. Replacement of the motor
(1) After removing the belt, remove spring ⑦ as shown in Figure 10.
(2) Remove solder ⑧-1, and remove the parallel wire (5P) from the control P.C. board as shown in Figure 11.
(3) Remove two screws ⑨ and ⑩, and remove the motor, taking care not to damage the motor idler gear. (Refer to Figure 10.)
(4) Mount the new motor following the removal steps in the reverse order.

Note: Refer to Item 2-C to make sure that the temperature of the soldering iron and the soldering time are proper. Since the parallel wire is very easily damaged, handle it with care.
Fasten the two screws with a fastening torque of 3 kg.cm.

*When inserting the clutch spring, be careful of the inserting direction as shown in the Figure.

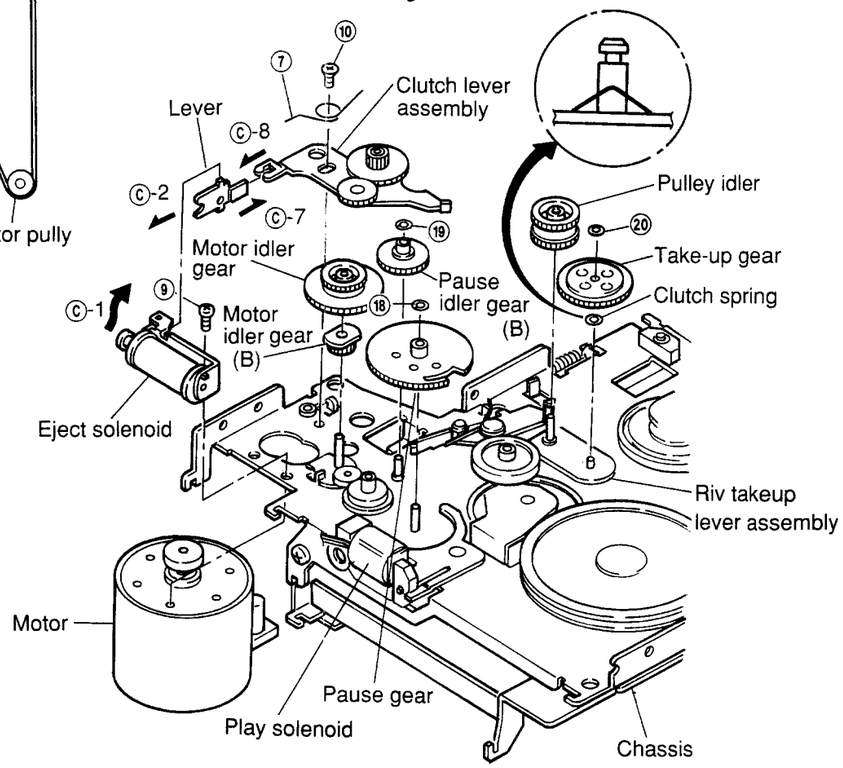

Figure 10

c. Replacement of the flywheels
(1) After removing the belt, pull out the two flywheels. Take care not to loose the polyslider washer ⑪ located between the flywheel and the chassis. (Refer to Figure 12.)
(2) Fix the polyslider washer to the new flywheel and mount the flywheel to the chassis.

d. Replacement of the play solenoid
(1) Remove the two solders ⑧-2 as shown in Figure 11.
(2) Remove one screw ⑫ and remove the solenoid as shown in Figure 11.
(3) Mount the new solenoid following the removal steps in the reverse order.

Note: Refer to Item 2-C to make sure that the temperature of the soldering iron and the soldering time are proper. Fasten the screws with a fastening torque of 2.3 kg.cm.

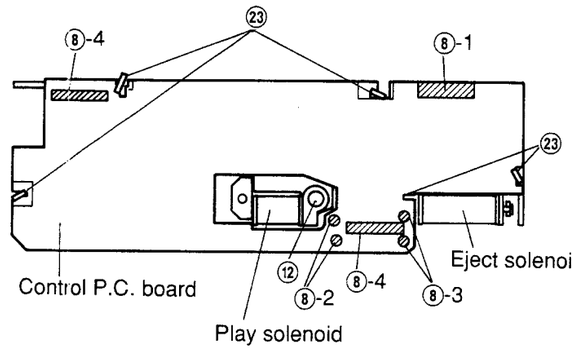

[For GR75E020, GR75E010, GR75E01A, GR75E01C models]

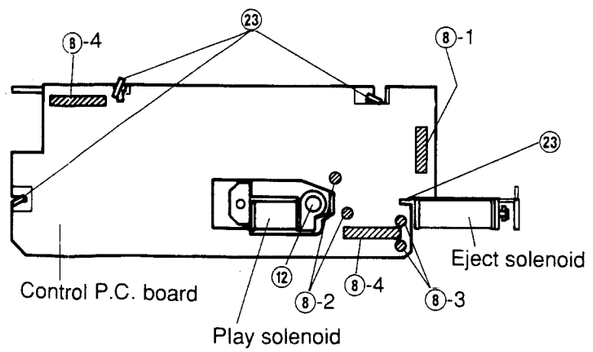

[For GR75L020, GR75L010 models]

Figure 11

e. Replacement of the eject solenoid
(1) Remove two solders ⑧-3. Take care not to loose the tube that protects the wire. (Refer to Figure 11.)
(2) Remove screw ⑨ and remove the play solenoid as shown in Figure 10.
(3) Align position ⓒ-1 of the new solenoid with position ⓒ-2 of the lever and fasten the screw as shown in Figure 10.
(4) Lead the wire through the tube and solder it.

Note: Refer to Item 2-C to make sure that the temperature of the soldering iron and the soldering time are proper. Fasten the screws with a fastening torque of 3 kg.cm.
As the solder wires are not insulated, do not let them cross each other.

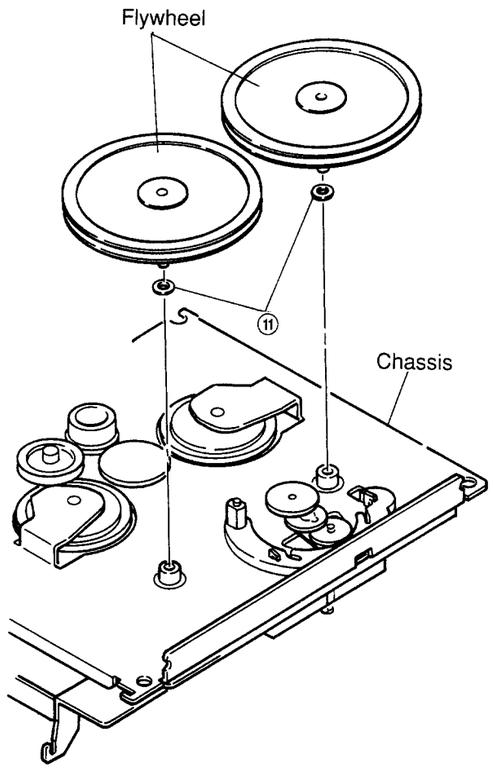

Figure 12

Suyd

f. Replacement of gears

(f-1) Replacement of the reverse idler gear
(1) Remove M1.2 lock washer ⑬, pull it up from the stud of the chassis and remove the gear as shown in Figure 13.
(2) Remount following the removal steps in the reverse order.

(f-2) Replacement of the sun gear
(1) Remove M1.2 lock washer ⑭, pull it up from the stud of the chassis and remove the gear as shown in Figure 13.
(2) Mount it, following the removal steps in the reverse order.

(f-3) Replacement of the fixing gear
(1) Adjust the two mounting claws for the fix gear on the chassis ⑮ and remove the section ⓒ-3 of the gear by pulling it up in the direction of the arrow shown in Figure 13.
(2) Insert the section ⓒ-4 of the new gear into the chassis, and mount it following the removal steps in the reverse order as shown in Figure 13.

(f-4) Replacement of the reverse lever assembly and planet gear
(1) Remove both the fixing gear and the sun gear and remove the reverse lever assembly as shown in Figure 13.
(2) Remove M1.7 lock washer ⑯ and remove the planet gear as shown in Figure 14.
(3) Mount the new planet gear and reverse lever following the removal steps in the reverse order.

Notes on f-1 through f-4:
After mounting all parts, check if the reverse lever moves in the directions marked ⓒ-5 when the reverse gear is turned clockwise and counterclockwise.

*After mounting the fixing gear, bend the claws ⑮ into the form of as shown in the Figure.

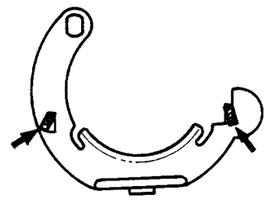

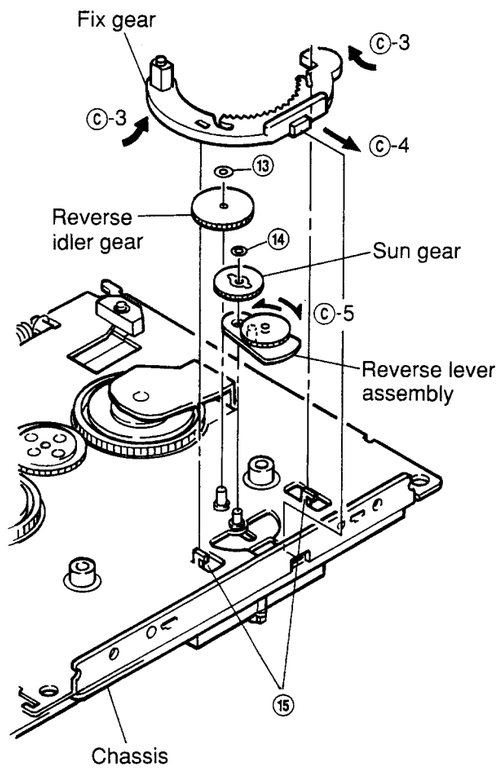

Figure 13

(f-5) Replacement of the clutch lever assembly and eject idler gear
(1) After removing the motor, remove the motor idler gear and the motor idler gear (B) and remove the clutch lever assembly as shown in Figure 10.
(2) Remove M1.2 lock washer ⑰ and remove the eject idler gear as shown in Figure 15.
(3) Mount the new gears and clutch lever following the removal steps in the reverse order.

Note: When mounting the gears to the lever, apply grease (FLOIL 425A) to the position ⓒ-6 as shown in Figure 15. Align the position ⓒ-7 with the position ⓒ-8 and mount the clutch lever as shown in Figures 10 and 15.

(f-6) Replacement of the pause gear
(1) Remove M1.2 lock washer ⑱ and remove the pause gear pulling it up from the stud of the chassis as shown in Figure 10.
(2) Mount the new gear following the removal steps in the reverse order.

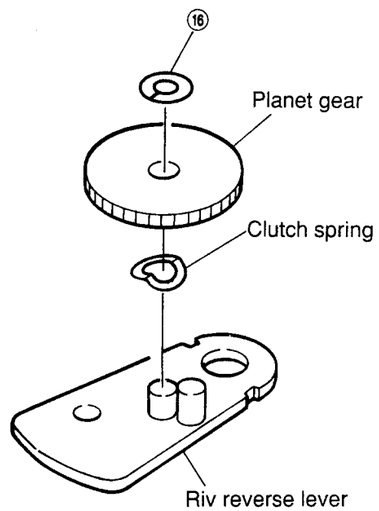

[Disassembly Reverse Lever Assembly]

Figure 14

(f-7) Replacement of the pause idler gear (B)
(1) After removing the motor and the motor idler gear, remove M1.2 lock washer ⑲ and remove the gear by pulling it up from the stud of the chassis as shown in Figure 10.
(2) Mount the new gear by following the removal steps in the reverse order.

(f-8) Replacement of the take-up gear
(1) After removing the belt and the pulley idler gear, remove M1.2 lock washer ⑳ by pulling it up from the stud of the riv take-up lever assembly as shown in Figure 10.
(2) Remount the take-up gear following the removal steps in the reverse order.

Notes on f:
Do not reuse the used washers. Take care to avoid damage by piercing and tearing.

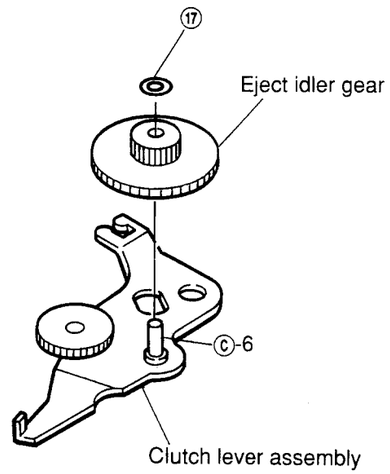

Figure 15

4. Replacement of the parts mounted on the front of the chassis

a. Replacement of the audio P.C. board
(1) Remove two solders ㉑ and remove the parallel wire (7P) and the head P.C. board as shown in Figure 16.
(2) Adjust the two claws ㉒ to the rectangular holes on the P.C. board and remove the P.C. board as shown in Figure 16.
(3) After replacement, mount the new P.C. board following the removal steps in the reverse order.

Note: The head P.C. board and the parallel wire are easily damaged. Handle them with care. Refer to Item 2-C to make sure that the temperature of the soldering iron and the soldering time are proper. Do not bring the soldering iron near the head P.C. board.

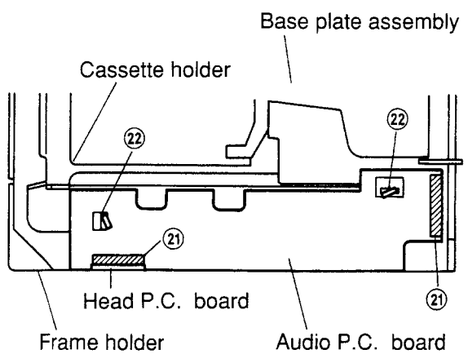

Figure 16

b. Replacement of the control P.C. board
(1) Remove seven solders ⑧ and remove the three parallel wires and the wires of the eject solenoid and of the play solenoid as shown in Figure 11.
(2) Remove five claws ㉓ and remove the P.C. board as shown in Figure 11. [For GR75E020, GR75E010, GR75E01A, GR75E01C models]
Remove four claws ㉓ and remove the P.C. board as shown in Figure 11.
[For GR75L020, GR75L010 models]
(3) After replacing the old P.C. board with a new one, mount it following the removal steps in the reverse order.

Note: As mentioned in Item 4-a, handle the parallel wires carefully, and be sure that the temperature of the soldering iron and the soldering time are proper. As the wires of the eject solenoid are not insulated, do not let them cross each other.

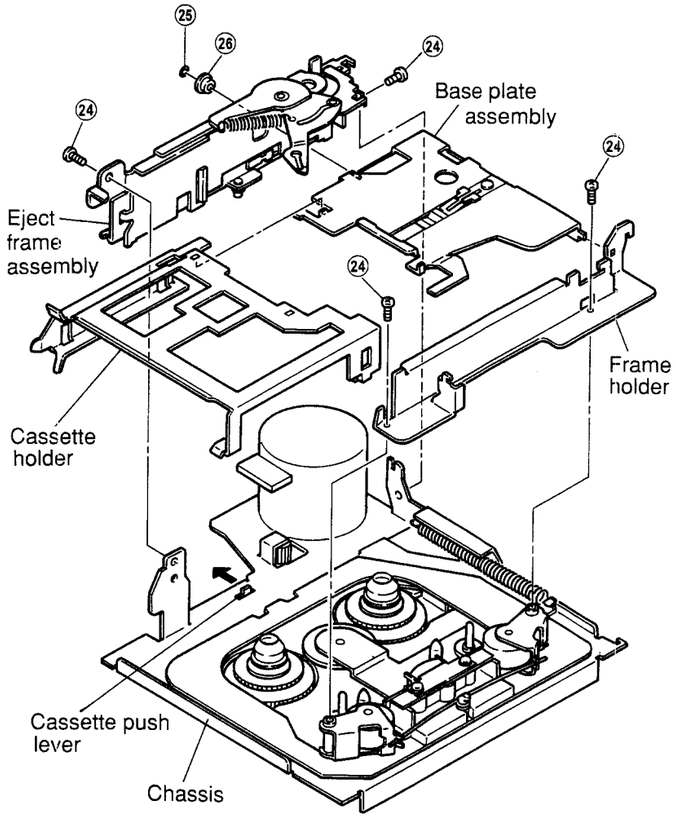

Figure 17

c. Disassembly and assembly of the cassette holder
(1) Remove four screws ㉔ and remove the eject frame assembly and the frame holder as shown in Figure 17.
(2) Remove M1.2 lock washer ㉕ and plate base roller ㉖ and remove the cassette holder and the base plate assembly as shown in Figure 17.
(3) Remount them following the removal steps in the reverse order.

Notes:
1. When mounting the cassette holder and the base plate, insert the slider shaft into the eject arm and fix them turning the slider shaft in the direction indicated by the arrow in the figure. Make sure that the cassette holder and the base plate are in the cassette-in mode during this operation. (Refer to Figure 18).
2. When mounting the eject frame assembly, push the cassette push lever in the direction indicated by the arrow in the Figure 17.
3. When mounting the base plate assembly and the eject frame assembly, or when mounting the eject frame assembly to the chassis, do not apply excessive force to avoid deformations of the eject arm and the frame.
4. Do not reuse the used washers. Take care to avoid damage by piercing and tearing.

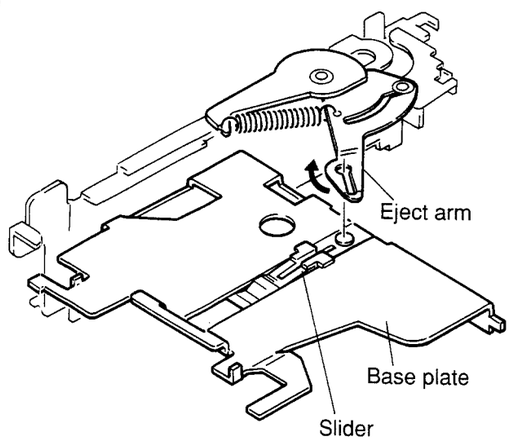

Figure 18

d. Replacement of the reels
(1) Remove M1.7 two lock washers ㉖ (Refer to figure 19).
(2) Move the select lever in the direction marked Ⓓ-1 in the Figure and remove the reel by gripping the reel gear as shown in Figure 19.
(3) After replacement, mount the new reels following the removal steps in the reverse order.
(4) After mounting, check the tape speed and the wow and flutter with test tape MTT-111.

Note: Since the reel is easily loosened if the cap is gripped, always handle it gripping the gear. Do not reuse the used washers. Take care to avoid damage by piercing and tearing.

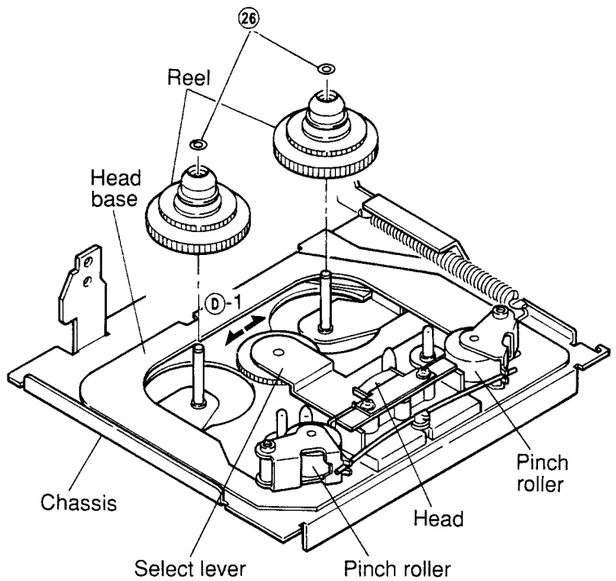

Figure 19

e. Replacement of the pinch rollers
(1) Remove pinch roller spring ㉗ as shown in Figure 20.
(2) Remove M3.1 two lock washers ㉘ and remove the pinch roller as shown in Figure 20.
(3) Mount the pinch rollers following the removal steps in the reverse order.
Apply insulation coating to the position Ⓓ-2 of the pinch roller as shown in Figure 20.

Note: Make sure that the pinch rollers are thoroughly fixed and that they are not deformed. Do not reuse used lock washers. Take care to avoid damage by piercing and tearing.

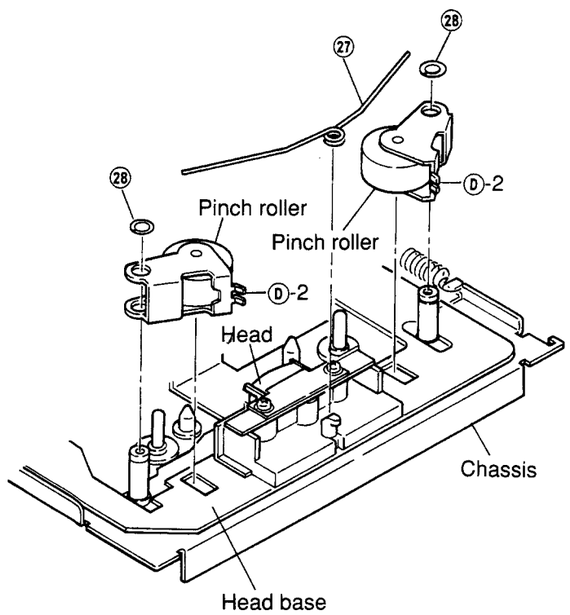

Figure 20

f. Replacement of the head
(1) After removing the pinch roller spring, remove two screws ㉙ as shown in Figure 21.
(2) Remove solder ㉚ and remove the head from the head P.C. board as shown in Figure 22.
(3) After replacement, mount the new head following the removal steps in the reverse order.

Notes: 1. Refer to Item 2-C to make sure that the temperature of the soldering iron and the soldering time are proper. Do not bring the soldering iron near the head P.C. board. Make sure that the head P.C. board is not lifted.
2. Fasten the two screws with a fastening torque of 2.3 kg.cm. Note that the tension of the head spring can be decreased if the screws are fastened too strongly.

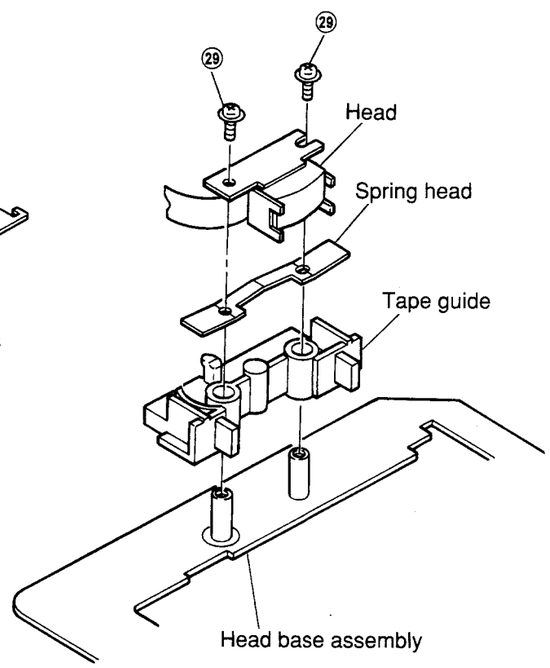

Figure 21

(4) Adjust the height of the head as shown in Figures 23, 24 and 25.
① Place the height adjustment gauge (AI-500) on the head base, and adjust the height so that the check bar fits in the tape head guide smoothly.
② When the check bar touches the top (or bottom) of the tape guide, insert a spacer (t 0.1 mm or polislider washer t 0.13 mm).
If necessary, remove the spacer.

Note: If you do not have a height gauge like described in (4)-①, run the tape at normal speed and adjust the height of the head and the tape head guide so that the tape does not curl.

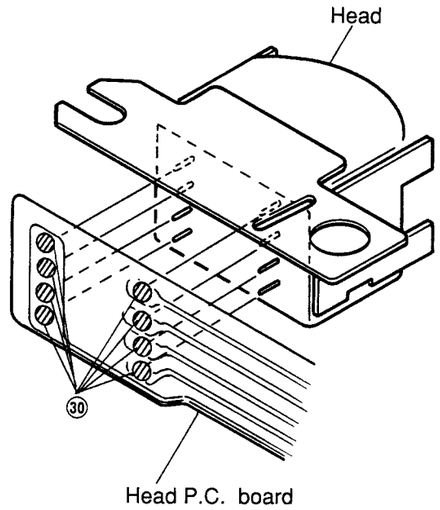

Figure 22

(5) After having assembled the complete mechanism, adjust the angle of the head with test tape MTT-113C. (Refer to chapter "Adjustment of the head angle".) After the adjustment, apply the screw lock and fix the screws.

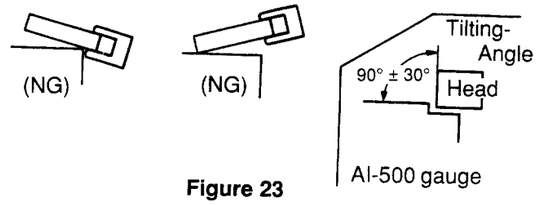

Figure 23

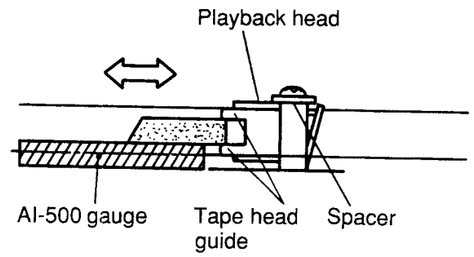

Figure 24

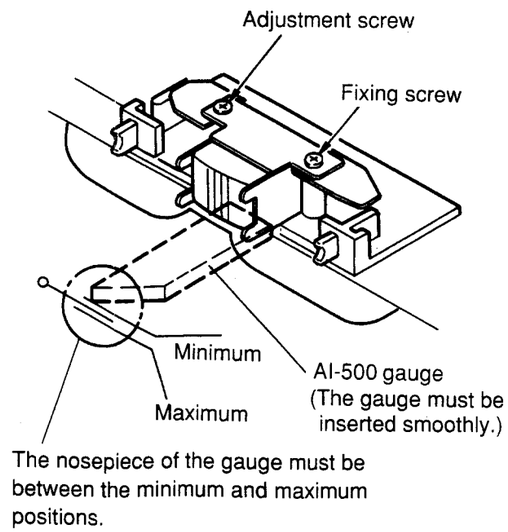

Figure 25

Exploded View (1/3)

● For GR75E010/01A/01C/020 Models

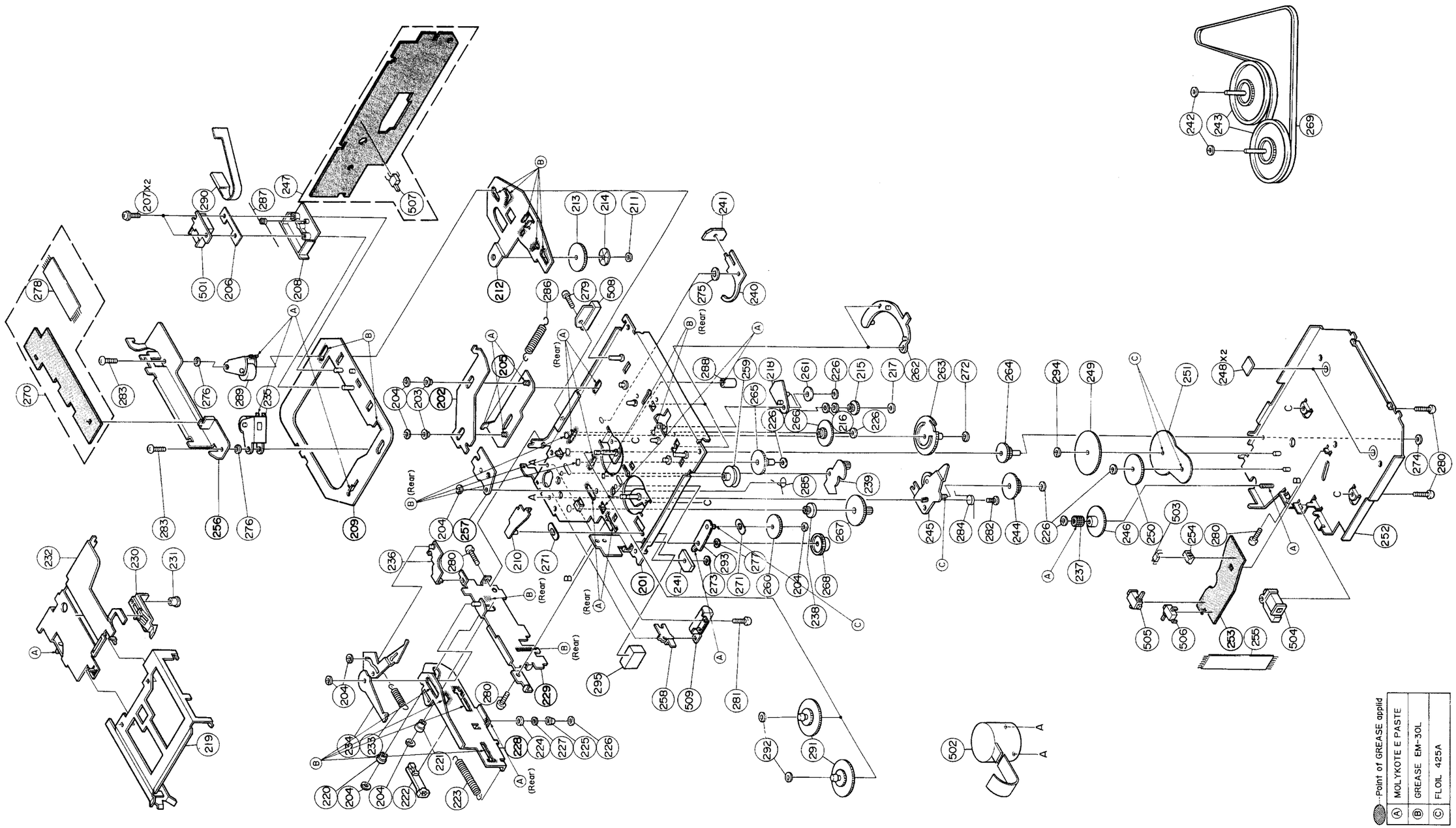

Cassette Deck Assembly Parts List (1/3)

Note : The parts without parts list are not supplied.

	Symbol No.	IN-dex	Part No.	Description
	203	3-C	43A11072W01	Roller, Sub Head
	204		04B41345P01	Washer, Lock(M1.2)
	206	2-B	41A10095W01	Spring, Head
	207	2-B	03S40019G03	Screw, F-Locks(M2x4)
	208	2-B	43B12545W01	Tape, Guide
	210	4-C	01A10206W01	Assy.,Riv Lever R/F Sol
	211	2-D	04B41345P29	Washer, Lock(M2.6)
	213	2-D	44A10295W01	Gear, Sensor
	214	2-D	14A10681W01	Reflector
	215	3-E	44A10142W01	Gear, Planet
	216	3-E	41A10097W02	Spring, Clutch
	217	3-E	04B41345P35	Washer, Lock(M1.7)
	218	3-E	01A21853W01	Assy., Riv Lever Reverse
	219	4-B	07B10074W01	Holder, Cassette
	220	5-B	43A12583W01	Roller, Eject
	221	5-C	43A63281F01	Roller, Plate Base
	222	5-C	44A82206F01	Rack
	223	5-C	41B10386W03	Spring, GR(Rack)
	224	4-C	43A10121W01	Roller, Eject A
	225	4-D	43A10360W01	Roller, Eject B
	226		04B41345P11	Washer, Lock(M1.2)
	227	4-D	43A12377W01	Roller, Eject C
	230	4-A	45B10376W01	Slider
	231	4-B	47A63278F01	Shaft, Slider
	232	4-A	01A10212W01	Assy.,Riv Plate Base
	233	4-C	41B10386W01	Spring, Eject Arm
	234	4-B	01A10148W01	Assy., Riv Eject Arm A
	235	3-B	01B10381W02	Assy., Pinch Roller
	236	4-C	45A10087W01	Lever Pack In SW
	237	4-F	44A12975W01	Pinion, Eject
	238	4-E	44A13617W01	Gear, Motor Idler(B)
	239	3-E	01A10201W02	Assy., Riv Lever Pause
	240	2-D	45A10092W01	Lever, Play
	241		76T10374W01	Chip
	242	1-G	04S40075G05	Washer Polyslider (M2.1)
	243	1-G	01A10368W01	Assy., Flywheel
	244	3-F	44A10141W01	Gear, Eject Idler
	245	3-E	01A10205W01	Assy., Riv Lever Clutch A
	246	3-F	44A10145W01	Gear, Eject
	247	2-B	01V11500W18	Assy., GR Control P.C. Board

Notes : ● ; For GR75E020 model only ■ ; For GR75E010 model only
▲ ; For GR75E01A model only ○ ; For GR75E01C model only

	Symbol No.	IN-dex	Part No.	Description
	248	3-G	43A90918F01	Spacer, Polyslider
	249	3-F	44A11063W01	Gear, Bottom A
	250	3-F	44A11064W01	Gear, Bottom B
	251	3-G	34A11122W02	Washer, GR
	252	3-H	01A10210W02	Assy., Riv. Cover Bottom
	254	3-G	15B11065W01	Guide, Photo
	255	4-G	30T15126W01	Wire, PC Sensor(7P)
	258	4-D	45A10101W01	Lever, Eject Sol
	259	3-D	49A10131W01	Pulley, Idler
	260	4-E	44A10133W01	Gear, Take Up
	261	3-E	44A10134W01	Gear, Sun
	262	3-E	44B10135W01	Gear, Fix
	263	3-E	44B10136W01	Gear, Pause
	264	3-F	44A10137W01	Gear, Pause Idler A
	265	3-D	44A10379W01	Gear, Pause Idler B
	266	3-E	44A10138W01	Gear, Reverse Idler
	267	3-E	44A10139W01	Gear, Motor Idler
	268	4-E	44A11062W01	Gear, Reel Idler
	269	1-G	42A10380W01	Belt, GR
●	270	3-A	01V14700W68	Assy., GR Audio P.C. Board
■	270	3-A	01V11500W19	Assy., GR Audio P.C. Board
▲	270	3-A	01V11500W19	Assy., GR Audio P.C. Board
○	270	3-A	01V11500W19	Assy., GR Audio P.C. Board
	271	4-D	41A10097W02	Spring, Clutch
	272	3-F	04B41345P15	Washer, Lock(M1.2)
	273	4-D	04B41345P02	Washer, Lock(M1.7)
	274	3-H	04B41345P17	Washer, Lock(M1)
	275	2-D	04B41345P30	Washer, Lock(M3.1)
	276	3-B	04B41345P32	Washer, Lock(M3.1)
	277	4-E	04B41345P06	Washer, Lock(M2.1)
	278	2-A	30T15126W02	Wire, PC Joint 7P
	279	2-D	03S44205G78	Screw, Pan(M2x6)
	280		03S44205G30	Screw, Pan(M2.6x4)
	281	4-D	03S72235F38	Screw, Pan(M2x3.3)
	282	3-F	03A12132W02	Screw, Eject Clutch (M2x2.3)
	283		03S43997P64	Screw, Pan(M1.7x3)
	284	3-F	41A10384W01	Spring, Eject Clutch
	285	3-E	41A10385W01	Spring, Cas Push
	286	2-C	41B10386W02	Spring, Sub Head
	287	2-B	41A10387W01	Spring, Pinch Roller
	288	3-D	43A12719W01	Roller, Pause

Others ; Common

	Symbol No.	IN-dex	Part No.	Description
	289	3-B	01B10381W01	Assy., Pinch Roller
	290	2-B	84T10367W01	Head P.C. Board
●	291	4-E	01T15164W01	Assy., Reel
■	291	4-E	01T15164W01	Assy., Reel
▲	291	4-E	01T15164W02	Assy., Reel
○	291	4-E	01T15164W01	Assy., Reel
	292	4-E	04B41345P12	Washer, Lock(M1.7)
●	293	4-D	01A11078W01	Assy., Riv Lever Take Up
■	293	4-D	01A11078W01	Assy., Riv Lever Take Up
▲	293	4-D	01A11078W01	Assy., Riv Lever Take Up
○	293	4-D	01A30161W01	Assy., Riv Lever Take Up
	294	3-F	04B41345P34	Washer, Lock(M1.2)
	295	4-D	75S12196W88	Rubber, Pad
				Miscellaneous
●	501	2-B	88T15971W01	Head
■	501	2-B	88T10373W01	Head
▲	501	2-B	88T10373W01	Head
○	501	2-B	88T10373W01	Head
	502	4-E	01V11500W64	Assy., Motor
	503	3-G	51T15144W01	Sensor, Photo
	504	4-G	01T10371W01	R/F Sol. Assy.
	505	4-F	40T15382W01	SW., Detector (Pack Down)
	506	4-G	40T15382W01	SW., Detector(Metal)
	507	2-C	40T15222W01	SW., Detector (Pack In)
	508	2-D	01T15249W01	Assy., Play Solenoid
	509	4-D	01T10369W02	Assy., Eject Solenoid

Notes : ● ; For GR75E020 model only ■ ; For GR75E010 model only
▲ ; For GR75E01A model only ○ ; For GR75E01C model only

Others ; Common

Exploded View (2/3)

● For GR75L010/020 Models

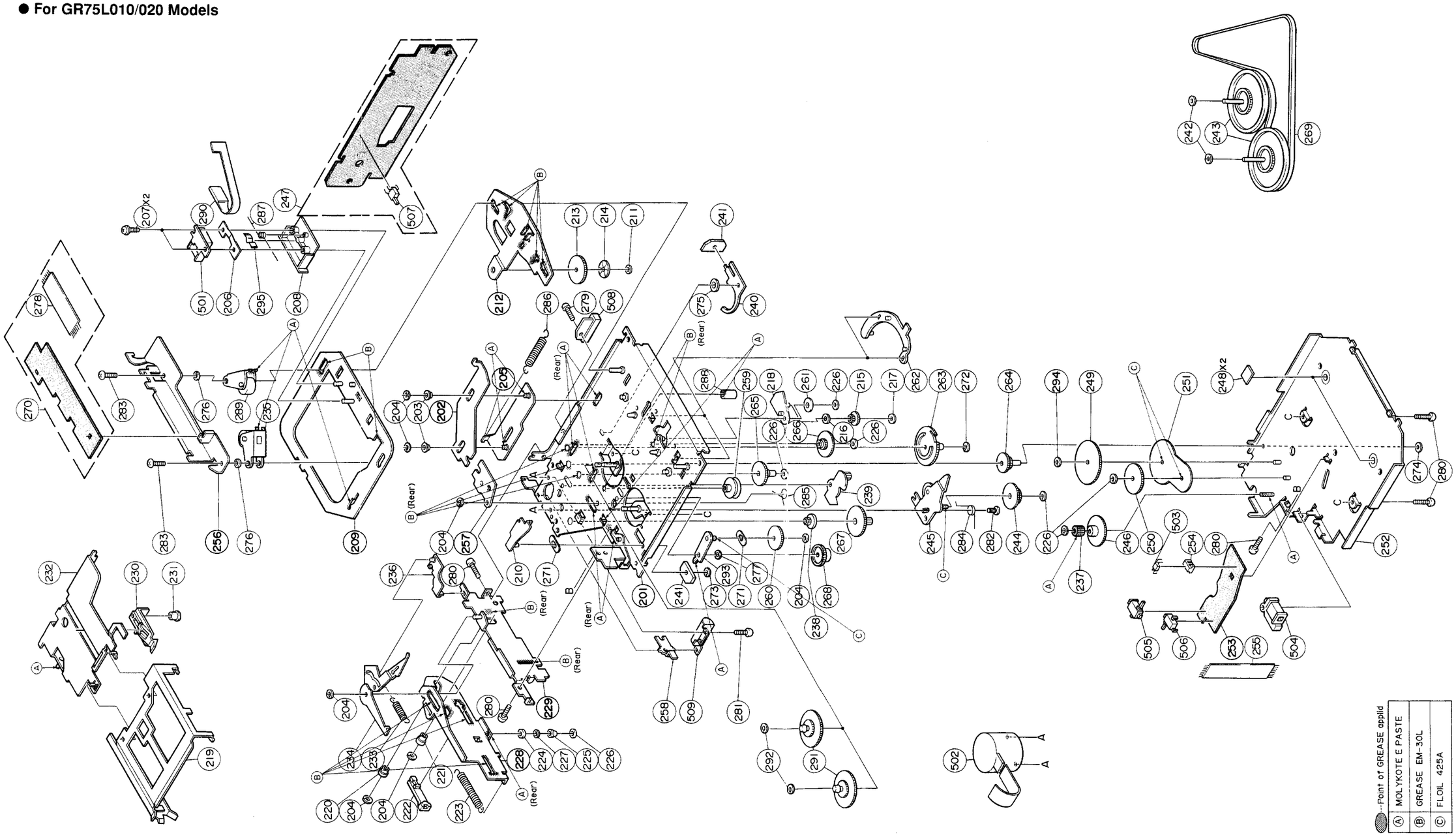

Cassette Deck Assembly Parts List (2/3)

Note : The parts without parts list are not supplied.

Symbol No.	IN-dex	Part No.	Description
203	3-C	43A11072W01	Roll, Sub Head
204		04B41345P01	Washer, Lock(M1.2)
206	2-B	41A21671W01	Spring, Head
207	2-B	03S40019G03	Screw, F-Locks(M2x4)
208	2-B	43B12545W01	Tape, Guide
210	4-C	01A10206W01	Assy., Riv Lever R/F Sol.
211	2-D	04B41345P29	Washer, Lock(M2.6)
213	2-D	44A10295W01	Gear, Sensor
214	2-D	14A10681W01	Reflector
215	3-E	44A10142W01	Gear, Planet
216	3-E	41A10097W02	Spring, Clutch
217	3-E	04B41345P31	Washer, Lock(M1.7)
218	3-E	01A21853W01	Assy., Riv Lever Reverse
219	4-B	07B10074W01	Holder, Cassette
220	5-B	43A12583W01	Roller, Eject
221	5-C	43A22153W01	Roller, Plate Base
222	5-C	44A82206F01	Rack
223	5-C	41B10386W03	Spring, GR(Rack)
224	4-C	43A10121W01	Roller, Eject(A)
225	4-D	43A10360W01	Roller, Eject(B)
226		04B41345P11	Washer, Lock(M1.2)
227	4-D	43A12377W01	Roller, Eject(C)
230	4-A	45B10376W01	Slider
231	4-B	47A63278F01	Shaft, Slider
232	4-A	01A10212W01	Assy., Riv Plate Base
233	4-C	41B10386W01	Spring, Eject Arm
234	4-B	01A21754W01	Assy., Riv Eject Arm(A)
235	3-B	01B10381W02	Assy., Pinch Roller
236	4-C	45A10087W01	Lever, Pack In SW.
237	4-F	44A20314W01	Pinion, Eject
238	4-E	44A13617W01	Gear, Motor Idler(B)
239	3-E	01A10201W02	Assy., Riv Lever Pause
240	2-D	45A10092W01	Lever, Play
241		76T10374W01	Chip
242	1-G	04S40075G05	Washer, Polyslider (M2.1)
243	1-G	01A10368W01	Assy., Flywheel
244	3-F	44A10141W02	Gear, Eject Idler
245	3-E	01A10205W02	Assy., Riv Lever Clutch(A)
246	3-F	44A10145W01	Gear, Eject
247	2-B	01V23700W03	Assy., GR Control P.C. Board
248	3-G	43A90918P01	Spacer, Polyslider
249	3-F	44A11063W01	Gear, Bottom(A)
250	3-F	44A11064W01	Gear, Bottom(B)
251	3-G	34A11122W02	Washer, GR
252	3-H	01A10210W02	Assy., Riv. Cover Bottom
254	3-G	15B11065W01	Guide, Photo
255	4-G	30T15126W01	Wire, PC Sensor(7P)
258	4-D	45A10101W01	Lever, Eject Sol.
259	3-D	49A10131W01	Pulley, Idler
260	4-E	44A10133W01	Gear, Take Up
261	3-E	44A10134W01	Gear, Sun
262	3-E	44B10135W01	Gear, Fix
263	3-E	44B21670W01	Gear, Pause
264	3-F	44A10137W01	Gear, Pause Idler(A)
265	3-D	44A10379W01	Gear, Pause Idler(B)
266	3-E	44A10138W01	Gear, Reverse Idler
267	3-E	44A10139W01	Gear, Motor Idler
268	4-E	44A11062W01	Gear, Reel Idler
269	1-G	42A10380W01	Belt, GR
★ 270	3-A	01V11500W19	Assy., GR Audio P.C. Board
◆ 270	3-A	01V14700W68	Assy., GR Audio P.C. Board
271		41A10097W02	Spring, Clutch
272	3-F	04B41345P15	Washer, Lock(M1.2)
273	4-D	04B41345P02	Washer, Lock(M1.7)
274	3-H	04B41345P17	Washer, Lock(M1)
275	2-D	04B41345P30	Washer, Lock(M3.1)
276	3-B	04B41345P32	Washer, Lock(M3.1)
277	4-E	04B41345P06	Washer, Lock(M2.1)
278	2-A	30T15126W02	Wire, PC Joint 7P
279	2-D	03S44205G78	Screw, Pan(M2x6)
280		03S44205G30	Screw, Pan(M2.6x4)
281	4-D	03S72235F38	Screw, Pan(M2x3.3)
282	3-F	03A12132W02	Screw, Eject Clutch (M2x2.3)
283		03S43997P64	Screw, Pan(M1.7x3)
284	3-F	41A10384W01	Spring, Eject Clutch
285	3-E	41A10385W01	Spring, Cas. Push
286	2-C	41B10386W02	Spring, Sub Head
287	2-B	41A10387W01	Spring, Pinch Roller
288	3-D	43A12719W01	Roller, Pause
289	3-B	01B10381W01	Assy., Pinch Roller
290	2-B	84T10367W01	Head P.C. Board

Notes : ★ ; For GR75L010 model only ◆ ; For GR75L020 model only
Others : Common

Symbol No.	IN-dex	Part No.	Description
291	4-E	01T15164W03	Assy., Reel
292	4-E	04B41345P12	Washer, Lock(M1.7)
293	4-D	01A11078W01	Assy., Riv Lever Take Up
294	3-F	04B41345P34	Washer, Lock(M1.2)
295	2-B	26A20537W01	Shield, Plate

Miscellaneous

Symbol No.	IN-dex	Part No.	Description
★ 501	2-B	88T10373W01	Head
◆ 501	2-B	88T15971W01	Head
502	4-E	01V23900W60	Assy., Motor
503	3-G	51T15144W01	Sensor, Photo
504	4-G	01T10371W01	R/F Sol. Assy
505	4-F	40T15382W01	SW., Detector (Pack Down)
506	4-G	40T15382W01	SW., Detector (Metal)
507	2-C	40T15222W01	SW., Detector (Pack In)
508	2-D	01T15249W01	Assy., Play Solenoid
509	4-D	01T10369W02	Assy., Eject Solenoid

Notes : ★ ; For GR75L010 model only ◆ ; For GR75L020 model only
Others ; Common

Exploded View (GR-Y Series) (3/3)

● **For GR75L02Y Model**

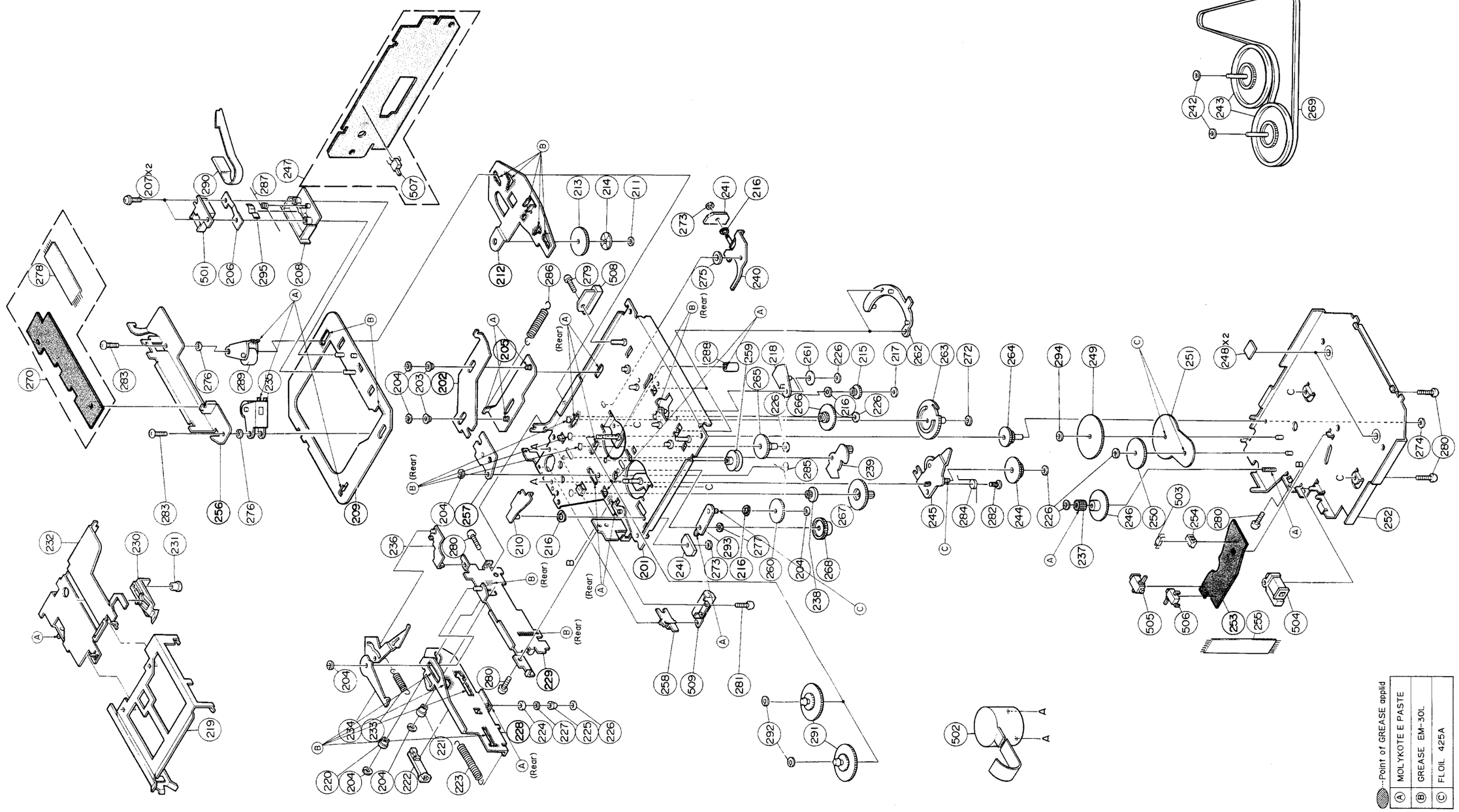

Cassette Deck Assembly Parts List (GR-Y Series) (3/3)

Note : The parts without parts list are not supplied.

Symbol No.	IN-dex	Part No.	Description
203	3-C	43A11072W01	Roll, Sub Head
204		04B41345P01	Washer, Lock(M1.2)
206	2-B	41A21671W01	Spring, Head
207	2-B	03S40019G03	Screw, F-Locks(M2x4)
208	2-B	43B12545W01	Tape, Guide
210	4-C	01A10206W01	Assy., Riv Lever R/F Sol.
211	2-D	04B41345P38	Washer, Lock(M2.6)
213	2-D	44A10295W01	Gear, Sensor
214	2-D	14A10681W01	Reflector
215	3-E	44A10142W01	Gear, Planet
216		41A10097W02	Spring, Clutch
217	3-E	04B41345P31	Washer, Lock(M1.7)
218	3-E	01A21853W01	Assy., Riv Lever Reverse
219	4-B	07B10074W01	Holder, Cassette
220	5-B	43A12583W01	Roller, Eject
221	5-C	43A63281F01	Roller, Plate Base
222	5-C	44A82206F01	Rack
223	5-C	41B10386W03	Spring, GR(Rack)
224	4-C	43A10121W01	Roller, Eject(A)
225	4-D	43A10360W01	Roller, Eject(B)
226		04B41345P11	Washer, Lock(M1.2)
227	4-D	43A12377W01	Roller, Eject(C)
230	4-A	45B10376W01	Slider
231	4-B	47A63278F01	Shaft, Slider
232	4-A	01A10212W01	Assy., Riv Plate Base
233	4-C	41B10386W01	Spring, Eject Arm
234	4-B	01A21754W01	Assy., Riv Eject Arm(A)
235	3-B	01B10381W02	Assy., Pinch Roller
236	4-C	45A10087W01	Lever, Pack In SW.
237	4-F	44A20314W01	Pinion, Eject
238	4-E	44A13617W01	Gear, Motor Idler(B)
239	3-E	01A10201W02	Assy., Riv Lever Pause
240	2-D	01A30879W01	Assy., Riv. Play Sol.
241		76T10374W01	Chip
242	1-G	04S40075G05	Washer, Polyslider (M2.1)
243	1-G	01A10368W01	Assy., Flywheel
244	3-F	44A10141W01	Gear, Eject Idler
245	3-E	01A10205W02	Assy., Riv Lever Clutch(A)
246	3-F	44A10145W01	Gear, Eject
247	2-B	01V23700W04	Assy., GR Control P.C. Board
248	3-G	43A90918F01	Spacer, Polyslider
249	3-F	44A11063W01	Gear, Bottom(A)
250	3-F	44A11064W01	Gear, Bottom(B)
251	3-G	34A11122W02	Washer, GR
252	3-H	01A10210W02	Assy., Riv. Cover Bottom
254	3-G	15B11065W01	Guide, Photo
255	4-G	30T15126W01	Wire, PC Sensor(7P)
258	4-D	45A10101W01	Lever, Eject Sol.
259	3-D	49A10131W01	Pulley, Idler
260	4-E	44A10133W01	Gear, Take Up
261	3-E	44A10134W01	Gear, Sun
262	3-E	44B10135W01	Gear, Fix
263	3-E	44B21670W01	Gear, Pause
264	3-F	44A10137W01	Gear, Pause Idler(A)
265	3-D	44A10379W01	Gear, Pause Idler(B)
266	3-E	44A10138W01	Gear, Reverse Idler
267	3-E	44A10139W01	Gear, Motor Idler
268	4-E	44A11062W01	Gear, Reel Idler
269	1-G	42A10380W01	Belt, GR
270	3-A	01V33300W03	Assy., GR Audio P.C. Board
272	3-F	04B41345P15	Washer, Lock(M1.2)
273		04B41345P02	Washer, Lock(M1.7)
274	3-H	04B41345P17	Washer, Lock(M1)
275	2-D	04B41345P30	Washer, Lock(M3.1)
276	3-B	04B41345P32	Washer, Lock(M3.1)
277	4-E	04B41345P37	Washer, Lock(M2.1)
278	2-A	30T15126W02	Wire, PC Joint 7P
279	2-D	03S44205G78	Screw, Pan(M2x6)
280		03S44205G30	Screw, Pan(M2.6x4)
281	4-D	03S72235F38	Screw, Pan(M2x3.3)
282	3-F	03A12132W02	Screw, Eject Clutch (M2x2.3)
283		03S43997P64	Screw, Pan(M1.7x3)
284	3-F	41A10384W01	Spring, Eject Clutch
285	3-E	41A10385W01	Spring, Cas. Push
286	2-C	41B10386W02	Spring, Sub Head
287	2-B	41A10387W01	Spring, Pinch Roller
288	3-D	43A12719W01	Roller, Pause
289	3-B	01B10381W01	Assy., Pinch Roller
290	2-B	84T35271W01	Head P.C. Board

Symbol No.	IN-dex	Part No.	Description
291	4-E	01T15164W03	Assy., Reel
292	4-E	04B41345P12	Washer, Lock(M1.7)
293	4-D	01A30161W01	Assy., Riv Lever Take Up
294	3-F	04B41345P34	Washer, Lock(M1.2)
295	2-B	26A20537W01	Shield, Plate
Miscellaneous			
501	2-B	88T15971W01	Head
502	4-E	01V23900W60	Assy., Motor
503	3-G	51T15144W01	Sensor, Photo
504	4-G	01T10371W01	R/F Sol. Assy
505	4-F	40T15382W01	SW., Detector (Pack Down)
506	4-G	40T15382W01	SW., Detector (Metal)
507	2-C	40T15222W01	SW., Detector (Pack In)
508	2-D	01T15249W01	Assy., Play Solenoid
509	4-D	01T10369W02	Assy., Eject Solenoid